CITY OF BONNEY LAKE
GRAINGER SPRINGS - PUMP HOUSE REPLACEMENT

LEGEND

EXISTING LEGEND

	PROPERTY LINE	TOE	TOPO TOE OF SLOPE		POWER JUNCTION BOX
	PROPERTY SECTION BOUNDARY		MAJOR CONTOUR		POWER MANHOLE
	EASEMENT		MINOR CONTOUR		POWER PAD MOUNT TRANSFORMER
G	NATURAL GAS	M	MAG NAIL CONTROL POINT		POWER COILS
W	WATER LINE		REBAR CAP		COMMUNICATIONS STRUCTURE
P	UNDERGROUND POWER		QUARTER CORNER		TELEPHONE VAULT
T	UNDERGROUND TELEPHONE		SECTION CORNER		COMMUNICATIONS POST MARKER
	BUILDING EDGE		WATER METER		FENCE POST
	TANK OUTLINE		WATER GATE VALVE		BOLLARD
	FENCE		FIRE HYDRANT (2 PORT)		TREE (CONIFER)
	GRAVEL ROAD EDGELINE		WATER BLOW OFF VALVE		TREE (DECIDUOUS)
	VEGETATION EDGELINE		UNDERGROUND GAS MARKER POST		STUMP
TOP	TOPO TOP OF SLOPE		POWER METER		

PROJECT LOCATION

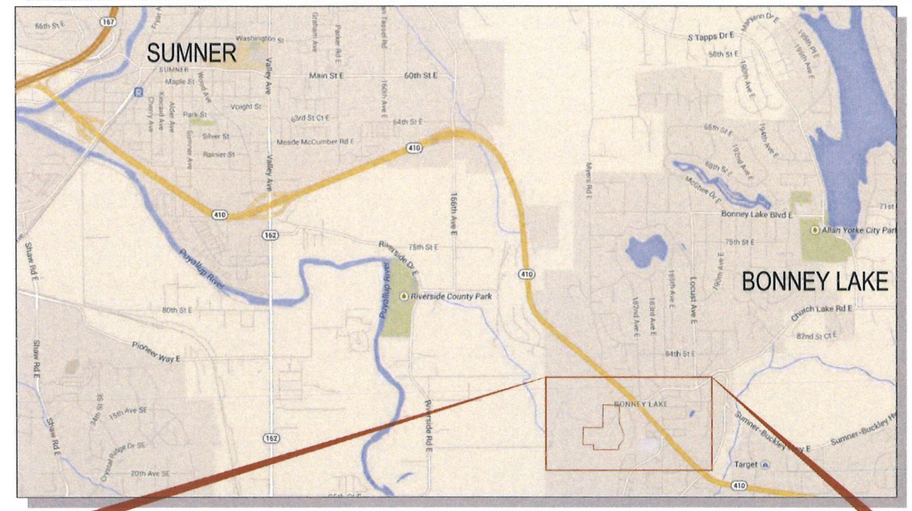

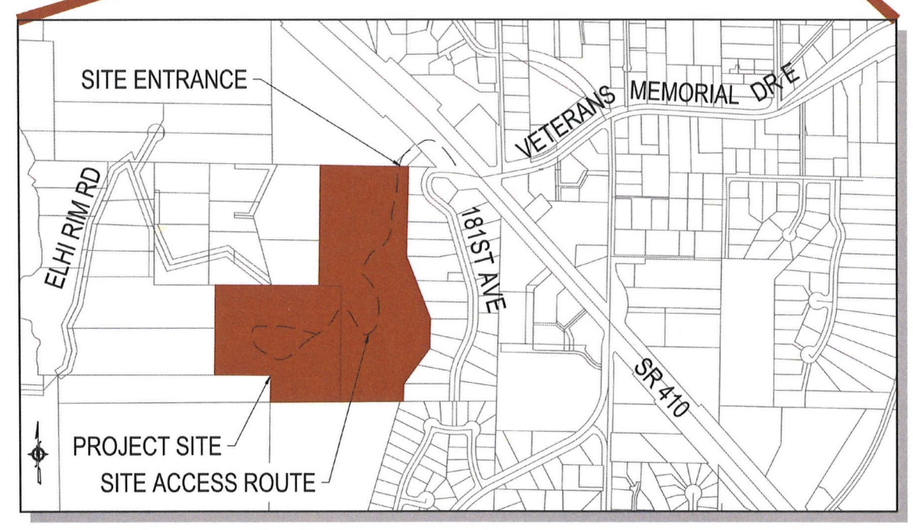

SURVEY NOTES

1. THIS MAP REPRESENTS CONDITIONS AND FEATURES EXISTING AT THE TIME OF THIS SURVEY IN SEPTEMBER, 2015.

2. THIS SURVEY WAS PREPARED BY FIELD TRAVERSE AS PER WAC 332-130-090, PART C. RELATIVE ACCURACY EXCEEDS 1 FOOT IN TEN THOUSAND.

3. THIS SURVEY WAS PERFORMED WITHOUT THE BENEFIT OF A TITLE REPORT, WHICH MAY REVEAL RESTRICTIONS OR EASEMENTS OF RECORD. ACCORDINGLY, NONE ARE SHOWN HEREON.

CONTROL POINTS:

POINT NO.	NORTHING	EASTING	ELEVATION	DESCRIPTION
2000	676317.96	1219981.01	445.55	XMAG
2001	676258.99	1220074.20	458.93	/.HMAG
2002	1220049.88	1220049.88	389.89	XHMAG
9000	1219962.79	1219962.79	449.01	XRC
BM	676011.39	1219564.26	291.69	DOMED BRASS MONUMENT

4. VERTICAL DATUM:
VERTICAL DATUM IS NAVD88

5. HORIZONTAL DATUM:
HORIZONTAL DATUM IS NAD 1983(91), WASHINGTON STATE PLANE SOUTH ZONE, U.S. SURVEY FEET.

6. SURVEY COMPLETED BY PARAMETRIX ENGINEERS

7. UTILITY NOTE:
SURVEYOR LOCATED ONLY VISIBLE SURFACE UTILITIES WITHIN THE TOPOGRAPHIC LIMITS AS SHOWN HEREON. NO INVESTIGATION OF SUBSURFACE UTILITIES HAS BEEN PERFORMED.

8. THE CONTRACTOR IS TO BE AWARE THAT MOST AS-BUILT INFORMATION AVAILABLE FOR THE WATER SYSTEM IN THIS AREA IS BASED ON NAVD29.

9. PARCEL NUMBER: 052032-4-004

CONTACT INFORMATION

CONTACT	COMPANY	POSITION	PHONE
KEN GILL	CITY OF BONNEY LAKE	ASSISTANT CITY ENGINEER	(253) 447-4336
CLAYTON POSEY	RH2 ENGINEERING	CONSULTANT	(253) 797-7632
24 HR. EMERGENCY	CITY OF BONNEY LAKE	(WATER/SEWER/POWER)	(253) 841-5431
24 HR. EMERGENCY	COMCAST	(CABLE)	(253) 565-3440

APPROVED
BY CITY OF BONNEY LAKE
CITY ENGINEER, PE
DATE 12-11-2023
Plans meet current
Development Policies and
Public Works Design Standards.

CALL 48 HOURS BEFORE YOU DIG
ONE CALL 811

REPORT ALL SPILLS
DEPT. OF ECOLOGY 1-800-258-5990

RH2

GEOFFREY G. DILLARD
STATE OF WASHINGTON
31196
REGISTERED PROFESSIONAL ENGINEER
SIGNED: 12/08/2023

CLAYTON L. POSEY
STATE OF WASHINGTON
53766
REGISTERED PROFESSIONAL ENGINEER
SIGNED: 12/08/2023

CITY OF BONNEY LAKE
GRAINGER SPRINGS
PUMP HOUSE REPLACEMENT

COVER

ENGINEER: PJJ | SAVE DATE: Dec 11, 2023 | CLIENT: BON | JOB NO.: 21-0291
REVIEWED: CLP | PLOT DATE: Dec 11, 2023 | FILENAME: GRS-D-COV.DWG

REVISIONS

NO.	DATE	DESCRIPTION	BY	REVIEW

SCALE: SHOWN
0" 1" 2"
DRAWING IS FULL SCALE WHEN BAR MEASURES 2"

DWG NO.: COV
SHEET NO.: 01

GENERAL NOTES

GENERAL NOTES

THIS SITE IS A POTABLE WATER SOURCE. CONTRACTOR SHALL TAKE EXTRA PRECAUTIONS TO PREVENT HAZARDOUS MATERIALS CONTAMINATION.

ALL WORK SHALL CONFORM TO THE RULES, REGULATIONS AND INSTRUCTIONS OF THE CITY OF BONNEY LAKE, THESE DRAWINGS, THE CITY OF BONNEY LAKE DEVELOPMENT POLICIES AND PUBLIC WORKS DESIGN STANDARDS STANDARD DETAILS AND PROJECT SPECIFICATIONS.

CONSTRUCTION OF SITE, ROAD, UTILITY IMPROVEMENTS SHALL BE IN ACCORDANCE WITH THE STANDARD SPECIFICATIONS FOR ROAD, BRIDGE AND MUNICIPAL CONSTRUCTION, 2020 EDITION, AS ISSUED BY THE WA. STATE DEPT. OF TRANSPORTATION AND THE AMERICAN PUBLIC WORKS ASSOC. AND CURRENT AWWA SPECIFICATIONS. ALL BUILDING/FACILITY MATERIALS, WORKMANSHIP, DESIGN AND CONSTRUCTION SHALL CONFORM TO THE INTERNATIONAL BUILDING CODE.

THE CONTRACTOR SHALL BE RESPONSIBLE FOR COMPLYING WITH THE PROVISIONS OF THE BUILDING PERMIT AS ISSUED BY THE CITY FOR THIS PROJECT.

THE CONTRACTOR SHALL BE RESPONSIBLE FOR ALL SAFETY PRECAUTIONS AND THE METHODS, TECHNIQUES, SEQUENCES OR PROCEDURES REQUIRED TO PERFORM THE WORK, INCLUDING COVID 19 SAFETY PRECAUTIONS. SEE SPECIFICATIONS FOR MORE INFORMATION.

CONTRACTOR IS RESPONSIBLE FOR MEETING ALL REQUIREMENTS FOR OFF SITE DISPOSAL.

A COPY OF THE APPROVED PLANS MUST BE ON-SITE WHENEVER CONSTRUCTION IS IN PROGRESS. CONTRACTOR IS RESPONSIBLE FOR OBTAINING ANY OTHER REQUIRED OR RELATED PERMITS PRIOR TO BEGINNING CONSTRUCTION.

CONTRACTOR SHALL PROVIDE ACCESS TO THE EXISTING PUMP HOUSE AND COLLECTION SYSTEM AT ALL TIMES.

CALL 1-800-424-5555 48 HOURS BEFORE CONSTRUCTION FOR UTILITY LOCATIONS.

THE CONTRACTOR SHALL NOTIFY THE CITY AND UTILITY OWNER A MINIMUM OF 48 HOURS IN ADVANCE OF ANY PLANNED DISRUPTION TO UTILITIES INCLUDING, BUT NOT LIMITED TO WATER, TELEPHONE, AND POWER.

ALL SURFACES SHALL BE RESTORED WITH LANDSCAPING, TOPSOIL AND HYDROSEEDING, GRAVEL, OR HMA PER PLAN. ALL AREAS DISTURBED BY THE CONTRACTOR SHALL BE RESTORED EVEN IF NOT IDENTIFIED ON THE PLANS. IF NOT IDENTIFIED ON THE PLANS, IMPROVED (HARD) SURFACES SHALL BE RESTORED WITH IN KIND MATERIAL. VEGETATION AREAS SHALL BE RESTORED WITH TOP SOIL AND HYDROSEED.

PARKING FOR CONSTRUCTION PERSONNEL SHALL BE LIMITED TO AREAS WITHIN THE CONSTRUCTION LIMITS UNLESS OTHERWISE AUTHORIZED BY THE OWNER.

ALL SYRUCTURE SUBGRADES SHALL BE INSPECTED BY A LICENSED GEOLOGIST OR GEOTECHNICAL ENGINEER DESIGNATED BY THE OWNER PRIOR TO PLACEMENT OF ANY ROCK, FILL OR CONCRETE.

TEMPORARY SLOPES SHALL CONFORM TO ALL APPLICABLE SAFETY REGULATIONS AND SHALL BE COVERED WITH PLASTIC DURING WET WEATHER TO REDUCE EROSION AND SLOPE FAILURE POTENTIAL.

CONTRACTOR MUST PROVIDE EROSION CONTROL FENCING AND OTHER MEASURES TO SATISFY CITY TESC REQUIREMENTS.

THE CITY OF BONNEY LAKE WILL ARRANGE WITH THE CONTRACTOR FOR ATTENDANCE AT A PRE-CONSTRUCTION MEETING PRIOR TO THE START OF THE PROJECT.

WATER MAINS SHALL BE CLASS 52 CEMENT LINED DUCTILE IRON, UNLESS OTHERWISE NOTED ON THE PLANS. FIRE HYDRANT LATERALS SHALL BE CLASS 53 CEMENT LINED DUCTILE IRON.

THE CONTRACTOR SHALL NOTIFY THE CITY INSPECTOR AT LEAST SEVEN (7) DAYS IN ADVANCE AND MAKE THE NECESSARY ARRANGEMENTS WITH THE CITY INSPECTOR FOR CONNECTION TO EXISTING WATER SYSTEM. WATER SHUT OFFS REQUIRE A MINIMUM OF 72 HOURS PRIOR NOTIFICATION. THE CITY OF BONNEY LAKE WILL OPERATE ALL EXISTING VALVES.

WHERE CONFLICTS EXIST, INSTALL WATER MAIN BELOW OTHER UTILITIES UNLESS OTHERWISE NOTED ON THE PLANS. MINIMUM VERTICAL SEPARATION BETWEEN UTILITIES SHALL BE TWELVE (12) INCHES WITH A SAND CUSHION AND HAND COMPACTION. AS REQUIRED, PROVIDE VERTICAL BENDS AND THRUST BLOCKING IN ACCORDANCE WITH THE CITY OF BONNEY LAKE'S STANDARDS.

ALL OPERATING NUTS ON GATES VALVES ARE TO BE EXTENDED TO WITHIN EIGHTEEN (18) TO TWENTY-FOUR (24) INCHES OF FINAL GRADE. MINIMUM COVER OVER WATER MAIN SHALL BE FORTY-EIGHT (48) INCHES UNLESS OTHERWISE NOTED.

PROPOSED WATER MAINS ARE TO BE TESTED IN ACCORDANCE WITH CITY OF BONNEY LAKE SPECIFICATIONS PRIOR TO CONNECTING TO THE EXISTING WATER SYSTEM. THE USE OF AN APPROVED BACKFLOW DEVICE IS REQUIRED TO PREVENT CROSS CONNECTIONS DURING TESTING.

CONTRACTOR IS REQUIRED TO FOLLOW ALL CONFINED SPACE ENTRY AND FALL PROTECTION REGULATIONS PRIOR TO ENTERING CONFINED SPACE.

CONTRACTOR IS REQUIRED TO PROVIDE A COMPETENT PERSON(S) TRAINED TO IDENTIFY EXISTING OR PREDICTING HAZARDS RELATED TO TRENCH SAFETY, SOIL CONDITIONS, AND SHORING REQUIREMENTS, IN ACCORDANCE WITH WAC 296-155 PART N. REPRESENTATIVES OF THE CITY SHALL NOT BE REQUIRED TO PERFORM THE ROLE OF COMPETENT PERSON FOR THE PROJECT. NO WORKERS SHALL ENTER A TRENCH OR OTHER EXCAVATION FOUR (4) FEET OR MORE IN DEPTH WITHOUT TRENCH SAFETY IN PLACE.

ALL EXCAVATIONS SHALL BE SECURED AT THE END OF EACH WORKING DAY.

ALL FITTINGS SHALL BE AS SHOWN ON THE PLANS. RESTRAINED JOINT (RJ) FITTINGS SHALL BE TRUE RESTRAINED JOINT (TRJ).

SITE DATA: TAX PARCEL(S) NO. 0520324016 (617,245 SF) AND NO. 0520324004 (438,213 SF)
ADDRESS: 17940 ELHI RIM RD, 17835 ELHI RIM RD
OWNER ADDRESS (BONNEY LAKE WATER): 21719 96TH STREET EAST, BUCKLEY, WA 98321

EXISTING UTILITIES

ALL UTILITIES: ALL EXISTING UTILITIES INDICATED ON THE DRAWINGS HAVE BEEN PLOTTED FROM FIELD SURVEY OF MARKINGS PREPARED BY LOCAL UTILITY COMPANIES OR AGENCIES THROUGH THE UTILITY NOTIFICATION CENTER. THEIR SOURCE OF INFORMATION GENERALLY CONSISTS OF CONSTRUCTION RECORDS AND OTHER DATA OBTAINED VERBALLY FROM OFFICIALS ASSOCIATED WITH THE PARTICULAR UTILITY. OWNER AND ENGINEER DO NOT GUARANTEE AND DO NOT ASSUME ANY RESPONSIBILITY FOR THE ACCURACY OF THIS INFORMATION. IT IS UNDERSTOOD THAT OTHER ABOVE GROUND AND UNDERGROUND FACILITIES/UTILITIES NOT SHOWN ON THE DRAWINGS MAY BE ENCOUNTERED DURING THE COURSE OF THE WORK. CONTRACTOR SHALL PRESERVE, PROTECT AND SUPPORT ALL EXISTING UTILITIES ENCOUNTERED DURING CONSTRUCTION. IT IS THE SOLE RESPONSIBILITY OF THE CONTRACTOR TO INDEPENDENTLY VERIFY UTILITY LOCATIONS SHOWN TO AVOID DAMAGE AND/OR DISTURBANCE TO SUCH UTILITIES, AND TO FURTHER DISCOVER AND AVOID ANY OTHER UTILITIES NOT SHOWN WHICH MAY BE AFFECTED BY THE IMPLEMENTATION OF THIS PLAN.

POWER, TELECOMMUNICATIONS, GAS: LOCATIONS OF THESE UTILITIES ARE ILLUSTRATIVE ONLY. THE DEPTH OF EACH OF THESE UTILITIES IS UNKNOWN AND MAY VARY SIGNIFICANTLY.

THE CONTRACTOR SHALL HAVE ALL UTILITIES LOCATED BY THE APPROPRIATE UTILITY LOCATING PROFESSIONALS, PRIOR TO AND DURING CONSTRUCTION. THE CONTRACTOR SHALL IMMEDIATELY NOTIFY THE ENGINEER AND THE UTILITY COMPANY WHEN A CONFLICT OCCURS.

TEMPORARY EROSION AND SEDIMENT CONTROL GENERAL NOTES

NO SILTATION OF EXISTING OR PROPOSED DRAINAGE FACILITIES SHALL BE ALLOWED. THE CONTRACTOR SHALL PREVENT MIGRATION OF SILTS TO OFF-SITE PROPERTIES. CONTRACTOR SHALL NOT DISCHARGE STORMWATER OFF-SITE THAT DOES NOT MEET DOE REQUIREMENTS FOR TURBIDITY AND OTHER PARAMETERS. ALL DISTURBED EARTH CAUSED BY CONTRACTOR'S ACTIVITIES SHALL BE HYDROSEEDED.

STABILIZE ALL EXPOSED AREAS WITHIN 48 HOURS AFTER REACHING FINISHED GRADE. STABILIZE ALL EXPOSED & UNWORKED SOILS WITHIN 48 HOURS DURING THE WET SEASON (OCT 1 THRU APRIL 30) AND WITHIN 7 DAYS DURING THE DRY SEASON.

AREAS OVER 5000 SQUARE FEET TO BE PAVED MUST BE PROVIDED WITH A CRUSHED ROCK SUBBASE OR OTHER APPROVED ARMORING WITHIN A MINIMUM OF SEVEN (7) DAYS AFTER REACHING GRADE.

THE BEST WAY TO REDUCE EROSION & REDUCE COSTS OF EROSION CONTROLS IS TO MINIMIZE THE GROUND AREA THAT IS CLEARED AND DISTURBED AT ANY GIVEN TIME.

BEST MANAGEMENT PRACTICES SHALL BE EMPLOYED AS NECESSARY.

- SILT FENCE SHALL BE INSTALLED IN AREAS OF CLEARING, GRADING, OR DRAINAGE PRIOR TO STARTING THOSE ACTIVITIES. SILT FENCE J-HOOKS SHALL BE USED ON LONG SLOPES.
- DUST CONTROL SHALL BE UTILIZED AS NECESSARY ACROSS SITE.

ADDITIONAL TESC MEASURES MAY BE NECESSARY. CONTRACTOR TO COMPLY WITH STORMWATER POLLUTION PREVENTION PLAN (SWPPP) INCLUDED IN THE SPECIFICATIONS.

Sheet List Table

SHEET NO.	SHEET TITLE	DWG NO.
01	COVER	COV
02	GENERAL NOTES	G01
03	EXISTING SITE PLAN	C01
04	TESC AND DEMOLITION PLAN	C02
05	CONSTRUCTION GRADING PLAN	C03
06	CONSTRUCTION GRADING SECTIONS	C04
07	PROPOSED GRADING PLAN	C05
08	PROPOSED GRADING SECTIONS	C06
09	PROPOSED OVERALL SITE PLAN	C07
10	PROPOSED UTILITY PLAN	C08
11	SITE DETAILS 1	D01
12	SITE DETAILS 2	D02
13	BUILDING ARCHITECTUAL ELEVATIONS	A01
14	BUILDING FLOOR PLAN AND SECTIONS	S01
15	BUILDING ROOF PLAN	S02
16	STRUCTURAL NOTES 1	S03
17	STRUCTURAL NOTES 2	S04
18	STRUCTURAL DETAILS 1	S05
19	STRUCTURAL DETAILS 2	S06
20	MECHANICAL PLAN	M01
21	MECHANICAL PROFILES	M02
22	VAULT PLAN AND PROFILE	M03
23	MECHANICAL DETAILS 1	M04
24	MECHANICAL DETAILS 2	M05
25	CONNECTION DETAILS	M06
26	EXISTING TREATMENT BUILDING AND DEMOLITION PLAN (BID ADD)	M07
27	TREATMENT BUILDING IMPROVEMENTS (BID ADD)	M08
28	TREATMENT BUILDING DETAILS (BID ADD)	M09
29	ELECTRICAL LEGEND	E01
30	ONE-LINE DIAGRAM	E02
31	ELECTRICAL SITE PLAN	E03
32	ELECTRICAL DEMOLITION PLAN	E04
33	PUMP HOUSE POWER DISTRIBUTION AND SIGNAL PLAN	E05
34	VAULT AND CLEARWELL POWER DISTRIBUTION AND SIGNAL PLAN	E06
35	TREATMENT BUILDING POWER DISTRIBTION AND SIGNAL PLAN (BID ADD)	E07
36	LIGHTING, RECEPTACLE, AND GROUNDING PLAN	E08
37	VFD PANEL LAYOUT	E09
38	CONTROL LOGIC DIAGRAMS 1	E10
39	CONTROL LOGIC DIAGRAMS 2	E11
40	CONTROL LOGIC DIAGRAMS 3	E12
41	ELECTRICAL DETAILS 1	E13
42	ELECTRICAL DETAILS 2	E14
43	ELECTRICAL SCHEDULES	E15
44	RTU - POWER AND COMMUNICATIONS DIAGRAM MODIFICATIONS	E16
45	RTU - PLC INPUT AND OUTPUT WIRING 1	E17
46	RTU - PLC INPUT AND OUTPUT WIRING 2	E18
47	RTU - PLC INPUT AND OUTPUT WIRING 3	E19
48	TREATMENT PLANT RTU - POWER DIAGRAM MODIFICATIONS (BID ADD)	E20
49	TREATMENT PLANT RTU - PLC INPUT AND OUTPUT WIRING 1 (BID ADD)	E21
50	TREATMENT PLANT RTU - PLC INPUT AND OUTPUT WIRING 2 (BID ADD)	E22

BID ADDITIVE PLAN SHEETS

PIPE LENGTH MEASUREMENTS

PIPE LENGTHS CALLED OUT ON PLANS ARE MEASURED AS FOLLOWS:

FLANGE x FLANGE (FLxFL) PIPE MEASURED FROM FACE OF FLANGE TO FACE OF FLANGE.

FLANGE x PLAIN END (FLxPE) PIPE MEASURED FROM FACE OF FLANGE TO CENTER OF FITTING.

PLAIN END x PLAIN END (PExPE) PIPE MEASURED FROM CENTER OF FITTING TO CENTER OF FITTING.

RESTRAINED JOINT x RESTRAINED JOINT (RJxRJ) PIPE MEASURED FROM CENTER OF FITTING TO CENTER OF FITTING.

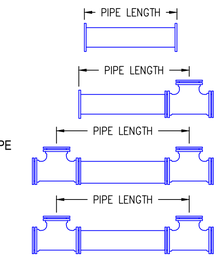

FITTINGS ARE ASSUMED TO BE STANDARD LENGTH 125#, 250# FLANGED OR COMPACT CLASS 350 MECHANICAL JOINTS. CONTRACTOR RESPONSIBLE FOR VERIFYING LENGTHS. IT IS THE CONTRACTOR'S RESPONSIBILITY TO TAKE INTO ACCOUNT ANY VARIATIONS IN FITTING DIMENSIONS.

NORTHING AND EASTING CALLOUT POINTS

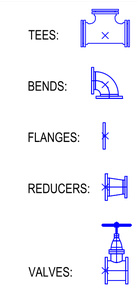

PLAN DRAWINGS GENERAL SYMBOLOGY

SECTION AND DETAIL REFERENCES

THE FOLLOWING CONVENTIONS HAVE BEEN USED WITHIN THESE DRAWINGS TO REFER THE READER BETWEEN THE SECTION/DETAIL AND THE PLAN FROM WHICH IT IS REFERENCED.

REFERENCE BUBBLES

PLAN REFERENCE BUBBLE - REFERS READER BACK TO THE PLAN FROM WHICH THE DETAIL OR SECTION ORIGINATED.

DETAIL/SECTION REFERENCE BUBBLE - REFERS READER TO THE DRAWING ON WHICH THE DETAIL OR SECTION IS LOCATED.

WHERE, ID = SECTION/DETAIL REFERENCE NUMBER
= DRAWING NUMBER ON WHICH DETAIL ORIGINATED OR RESIDES.

TEST PIT EXPLORATION RESULTS

TEST PIT NUMBER	DEPTH MEASURED	DESCRIPTION
1 (August 19, 2021)	0.0-0.5 FEET	TURF AND TOPSOIL.
	0.5-2.0 FEET	LIGHT BROWN, SANDY GRAVEL WITH SILT (GW). FINE TO COARSE SUBROUNDED GRAVEL, MANY COBBLES, FEW BOULDERS, FINE TO COARSE SAND, NON-PLASTIC FINES; SOME ROOTS; DRY TO MOIST; VERY DENSE (OUTWASH).
	2.0-9.0 FEET	GRAVELLY SAND WITH SILT (SW). LIGHT TO DARK BROWN; FINE TO COARSE SAND, FINE TO MEDIUM SUBROUNDED GRAVEL, MANY COBBLES, TRACE BOULDERS; STRATIFIED; DRY TO MOIST; FEW ROOTS; MODERATELY TO VERY DENSE (GLACIAL OUTWASH DEPOSITS). NO GROUNDWATER SEEPAGE. SIDEWALLS STABLE.
2 (May 4, 2023)	0.0-0.5 FEET	TURF AND TOPSOIL.
	0.5-1.0 FEET	BROWN SILTY SAND WITH GRAVEL; MODERATELY DENSE, MOIST
	1.0-4.0 FEET	GRAY TO BROWN MOTTLED GRAVEL WITH SAND AND SILT; MODERATELY DENSE; MOIST
	4.0-6.0 FEET	GRAY TO BROWN MOTTLED GRAVEL WITH SAND AND SILT; TRACE COBBLES; DENSE; WET GROUNDWATER SEEPAGE AT 4.0 FEET SIDEWALLS STABLE
	6.0-8.0 FEET	GRAY TO BROWN MOTTLED GRAVEL WITH SAND AND SILT; TRACE COBBLES; DENSE; WET GROUNDWATER SEEPAGE SIDEWALLS UNSTABLE

RH2

GODFREY G. DILLARD, STATE OF WASHINGTON, 31196, REGISTERED PROFESSIONAL ENGINEER
SIGNED: 12/08/2023

CLAYTON L. PARSLEY, STATE OF WASHINGTON, 53766, REGISTERED PROFESSIONAL ENGINEER
SIGNED: 12/08/2023

CITY OF BONNEY LAKE
GRAINGER SPRINGS
PUMP HOUSE REPLACEMENT

GENERAL NOTES

JOB NO.: 21-0231
CLIENT: BON
FILENAME: GRS-D-COV.DWG
SAVE DATE: Dec 11, 2023
PLOT DATE: Dec 11, 2023
ENGINEER: PJJ
REVIEWED: CLP

REVISIONS

NO.	DATE	DESCRIPTION	BY	REVIEW

SCALE: SHOWN
0" 1" 2"
DRAWING IS FULL SCALE WHEN BAR MEASURES 2"

DWG NO.: G01
SHEET NO.: 02 / 50

01 **EXISTING PUMP HOUSE**
NTS

02 **EXISTING PUMP HOUSE**
NTS

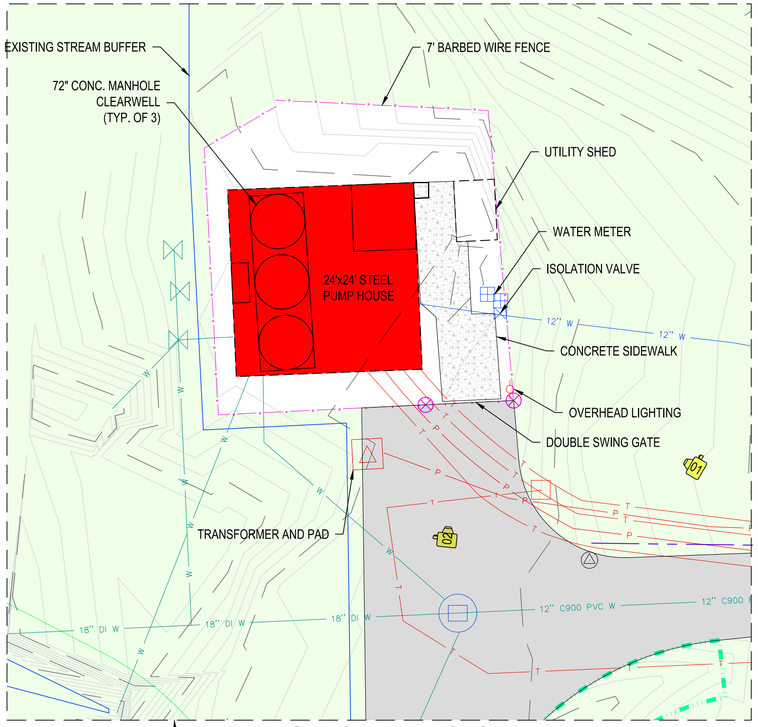

EXISTING PUMP HOUSE
1" = 10'

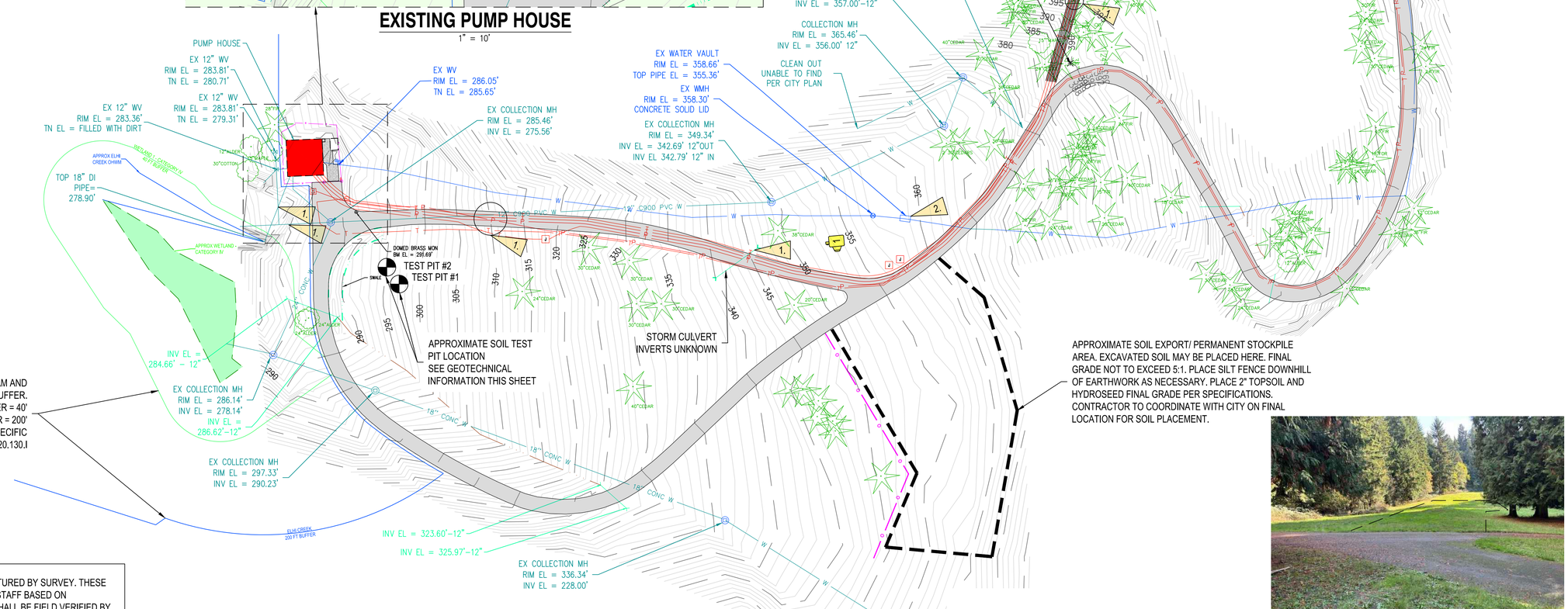

EXISTING SITE PLAN
1" = 40'

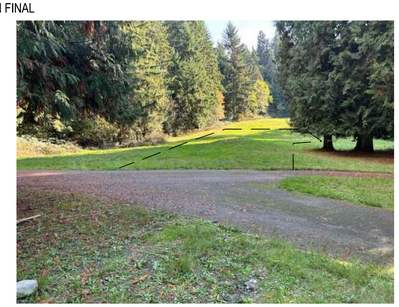

11 PROPOSED SOIL EXPORT/ PERMANENT STOCKPILE AREA

1. DENOTES UTILITIES NOT CAPTURED BY SURVEY. THESE ITEMS WERE ADDED BY RH2 ENGINEERING STAFF BASED ON CONSTRUCTION RECORD DRAWINGS AND SHALL BE FIELD VERIFIED BY CONTRACTOR PRIOR TO CONSTRUCTION.

2. LOCATION OF EXISTING WATER METER. METER TO BE REMOVED AND RELOCATED TO NEW STATION PER C07.

RH2

GODFREY G. DILLARD — STATE OF WASHINGTON — 31196 — REGISTERED PROFESSIONAL ENGINEER
SIGNED: 12/08/2023

CLAYTON L. PERRY — STATE OF WASHINGTON — 53766 — REGISTERED PROFESSIONAL ENGINEER
SIGNED: 12/08/2023

CITY OF BONNEY LAKE
GRAINGER SPRINGS PUMP HOUSE REPLACEMENT

BONNEY Lake

EXISTING SITE PLAN

ENGINEER: PJJ
REVIEWED: CLP
SAVE DATE: Dec 3, 2023
PLOT DATE: Dec 8, 2023
CLIENT: BON
FILENAME: GRS-S-C01.DWG
JOB NO.: 21-0291

REVISIONS

NO.	DATE	DESCRIPTION	BY	REVIEW

SCALE: SHOWN
0" 1" 2"
DRAWING IS FULL SCALE WHEN BAR MEASURES 2"

DWG NO.: C01
SHEET NO.: 03 / 50

MECHANICAL PIPING

MECHANICAL PIPING

ELECTRICAL PANELS

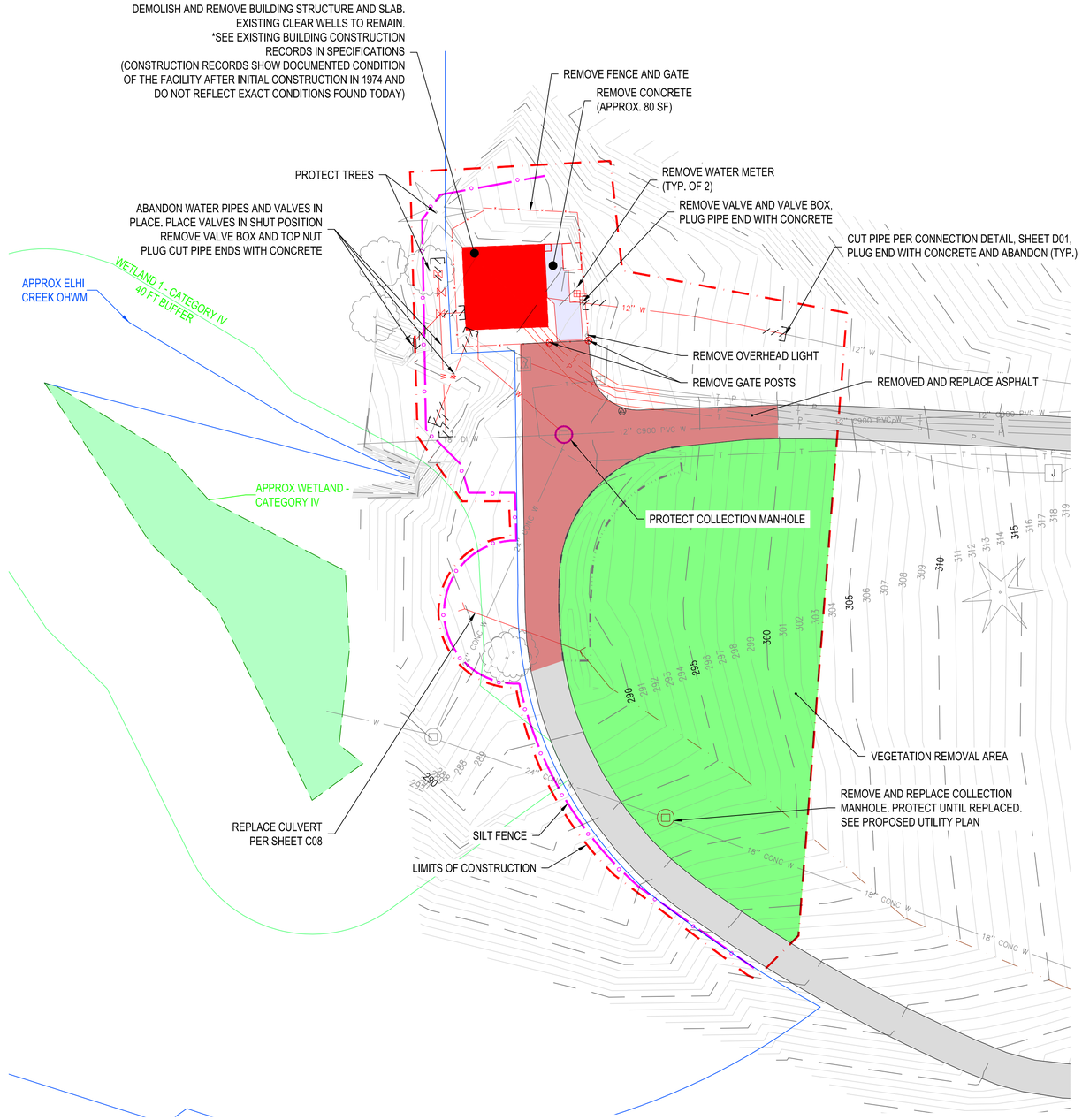

TESC AND DEMOLITION PLAN

1" = 20'

TESC NOTES

- CONTRACTOR SHALL STAKE CONSTRUCTION LIMITS BEFORE LAND DISTURBING ACTIVITIES.
- ALL TESC BEST MANAGEMENT PRACTICES (BMP) MUST BE INSTALLED PRIOR TO LAND DISTURBING ACTIVITIES.
- ALL VEGETATION NOT SPECIFICALLY CALLED OUT TO BE REMOVED SHALL BE PROTECTED THROUGHOUT CONSTRUCTION
- IF SEDIMENT OR CONSTRUCTION DEBRIS ACCUMULATES NEAR THE COLLECTION MANHOLES AT ANY TIME, THE CONTRACTOR MUST CLEAN THEM IMMEDIATELY AT NO ADDITIONAL EXPENSE TO THE CITY.
- THE TESC MEASURES SHOWN ARE THE MINIMUM REQUIRED UNDER THE BEST CONDITIONS. PROVIDE ADDITIONAL TESC MEASURES AS NECESSARY TO PROTECT OFF-SITE PROPERTIES, AND OFF-SITE WATERS.
- SEE PROJECT SPECIFICATIONS FOR ADDITIONAL TESC INFORMATION.
- CONTRACTOR SHALL PROVIDE AN ADOPTED TESC PLAN AND CONDUCT A TESC INSPECTION WITH THE CITY PRIOR TO LAND DISTURBING ACTIVITIES.
- NO SILTATION OF EXISTING OR PROPOSED DRAINAGE FACILITIES SHALL BE ALLOWED. THE CONTRACTOR SHALL PREVENT MIGRATION OF SILTS TO OFF-SITE PROPERTIES. CONTRACTOR SHALL NOT DISCHARGE STORMWATER OFF-SITE THAT DOES NOT MEET DOE REQUIREMENTS FOR TURBIDITY AND OTHER PARAMETERS. ALL DISTURBED EARTH CAUSED BY CONTRACTOR'S ACTIVITIES SHALL BE HYDROSEEDED.
- ERODIBLE EARTH NOT BEING WORKED, WHETHER AT FINAL GRADE OR NOT, SHALL BE STABILIZED WITHIN 48 HOURS DURING THE WET SEASON (OCT 1 THRU APRIL 30) AND WITHIN 7 DAYS DURING THE DRY SEASON USING PLASTIC COVERING, EROSION CONTROL MATTING, OR ANOTHER APPROVED COVERING METHOD.
- BEST MANAGEMENT PRACTICES SHALL BE EMPLOYED AS NECESSARY.
- SILT FENCE SHALL BE INSTALLED IN AREAS OF CLEARING, GRADING, OR DRAINAGE PRIOR TO STARTING THOSE ACTIVITIES. SILT FENCE J-HOOKS SHALL BE USED ON LONG SLOPES.

DEMO NOTES

- EXISTING PUMP HOUSE TO STAY IN SERVICE. FULL DEMOLITION OF PUMP HOUSE SHALL NOT TAKE PLACE UNTIL THE PROPOSED PUMP HOUSE IS IN FULL SERVICE.
- ALL ITEMS/STRUCTURES CALLED OUT TO BE REMOVED SHALL INCLUDE DEMOLITION, REMOVAL, AND DISPOSAL OF ALL MATERIALS ASSOCIATED WITH THE ITEM/STRUCTURE
- ALL SURFACES SHALL BE RESTORED WITH LANDSCAPING, TOPSOIL AND HYDROSEEDING, GRAVEL, OR HMA PER PLAN. ALL AREAS DISTURBED BY THE CONTRACTOR SHALL BE RESTORED EVEN IF NOT IDENTIFIED ON THE PLANS. IF NOT IDENTIFIED ON THE PLANS, IMPROVED (HARD) SURFACES SHALL BE RESTORED WITH IN KIND MATERIAL. VEGETATION AREAS SHALL BE RESTORED WITH TOP SOIL AND HYDROSEED.
- REMOVAL OF TREES, SHRUBS, AND BUSHES SHALL INCLUDE THE STUMP AND ROOT BALL.
- OTHER BRUSH AND VEGETATION NOT SHOWN ON THE PLAN VIEW WILL BE ENCOUNTERED. REMOVE ALL BRUSH AND VEGETATION AS NECESSARY TO CONSTRUCT IMPROVEMENTS. ALL VEGETATION REMOVAL, CLEARING, AND GRUBBING NECESSARY FOR CONSTRUCTION OF IMPROVEMENTS SHALL BE INCLUDED IN THE CLEARING AND GRUBBING BID ITEM.

RH2

GODFREY G. DILLARD, STATE OF WASHINGTON, 31196, REGISTERED PROFESSIONAL ENGINEER

SIGNED: 12/08/2023

CLAYTON L. PERRY, STATE OF WASHINGTON, 53766, REGISTERED PROFESSIONAL ENGINEER

SIGNED: 12/08/2023

CITY OF BONNEY LAKE
GRAINGER SPRINGS
PUMP HOUSE REPLACEMENT

BONNEY Lake

TESC AND DEMOLITION PLAN

ENGINEER: PJJ
REVIEWED: CLP
SAVE DATE: Dec 8, 2023
PLOT DATE: Dec 11, 2023
CLIENT: BON
FILENAME: GRS-D-C02.DWG
JOB NO.: 21-0291

REVISIONS

NO.	DATE	DESCRIPTION	BY	REVIEW

SCALE: SHOWN

0" 1" 2"

DRAWING IS FULL SCALE WHEN BAR MEASURES 2"

DWG NO.: C02

SHEET NO.: 04 / 50

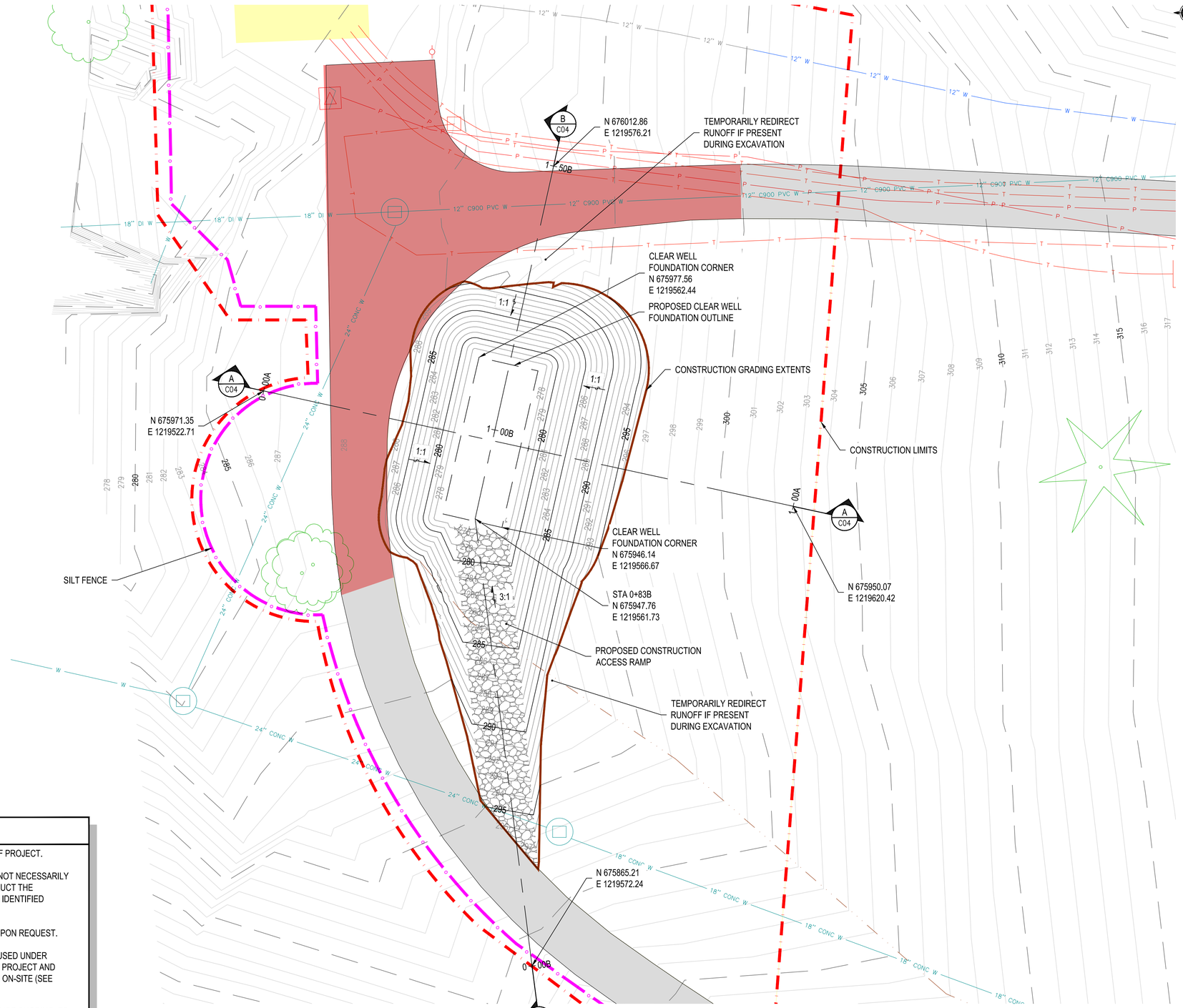

CONSTRUCTION GRADING PLAN

1" = 10'

EARTHWORK NOTES

1. ALL DISTURBED AREAS SHALL BE RESTORED TO EXISTING OR BETTER CONDITION BY THE END OF PROJECT.
2. CONSTRUCTION GRADING CONTOURS SHOWN ILLUSTRATE ONE POSSIBLE APPROACH, BUT ARE NOT NECESSARILY THE ONLY TEMPORARY GRADING METHOD. CONTRACTOR TO GRADE AS NECESSARY TO CONSTRUCT THE IMPROVEMENTS SAFELY TO MEET THE PROJECT OBJECTIVES. ALL WORK MUST STAY WITHIN THE IDENTIFIED CONSTRUCTION LIMITS.
3. EXISTING, CONSTRUCTION GRADE, AND FINAL GRADE CONTOURS AVAILABLE IN AUTOCAD DWG UPON REQUEST.
4. DO NOT REUSE EXCAVATED SOILS FOR STRUCTURAL BACKFILL. EXCAVATED SOILS MAY NOT BE USED UNDER STRUCTURES OR PAVING. EXCAVATED SOIL MAY BE STOCKPILED TEMPORARILY ON SITE DURING PROJECT AND USED UNDER LANDSCAPING/ UNIMPROVED AREAS. EXCESS SOILS MAY BE PLACED AND GRADED ON-SITE (SEE DWG C01) OR DISPOSED OF OFF-SITE.
5. TAKE ADDITIONAL MEASURES AS NECESSARY, INCLUDING ADDITIONAL SLOPE STABILIZATION AND/OR SHORING, TO CONSTRAIN EXCAVATION LIMITS TO WITHIN THE PROJECT PROPERTY.
6. CONSTRUCTION CONTOURS SHOWN DO NOT REFLECT UTILITY TRENCHING.

RH2

GODFREY G. DILLARD — STATE OF WASHINGTON — 31196 — REGISTERED PROFESSIONAL ENGINEER

SIGNED: 12/08/2023

CLAYTON L. POSEY — STATE OF WASHINGTON — 53766 — REGISTERED PROFESSIONAL ENGINEER

SIGNED: 12/08/2023

CITY OF BONNEY LAKE
GRAINGER SPRINGS
PUMP HOUSE REPLACEMENT

BONNEY LAKE

CONSTRUCTION GRADING PLAN

ENGINEER: PJJ
REVIEWED: CLP
SAVE DATE: Dec. 3, 2023
PLOT DATE: Dec 8, 2023
CLIENT: BON
FILENAME: GRS-D-C03A.DWG
JOB NO.: 21-0291

REVISIONS

NO.	DATE	DESCRIPTION	BY	REVIEW

SCALE: SHOWN

0" 1" 2"

DRAWING IS FULL SCALE WHEN BAR MEASURES 2"

DWG NO.: C03

SHEET NO.: 05 / 50

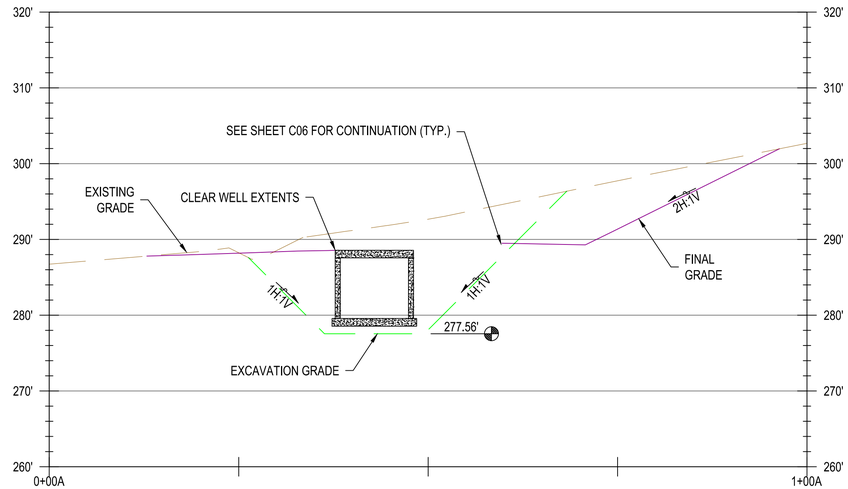

A / C03

EXCAVATION GRADING SECTION A: EAST-WEST

1" = 10'

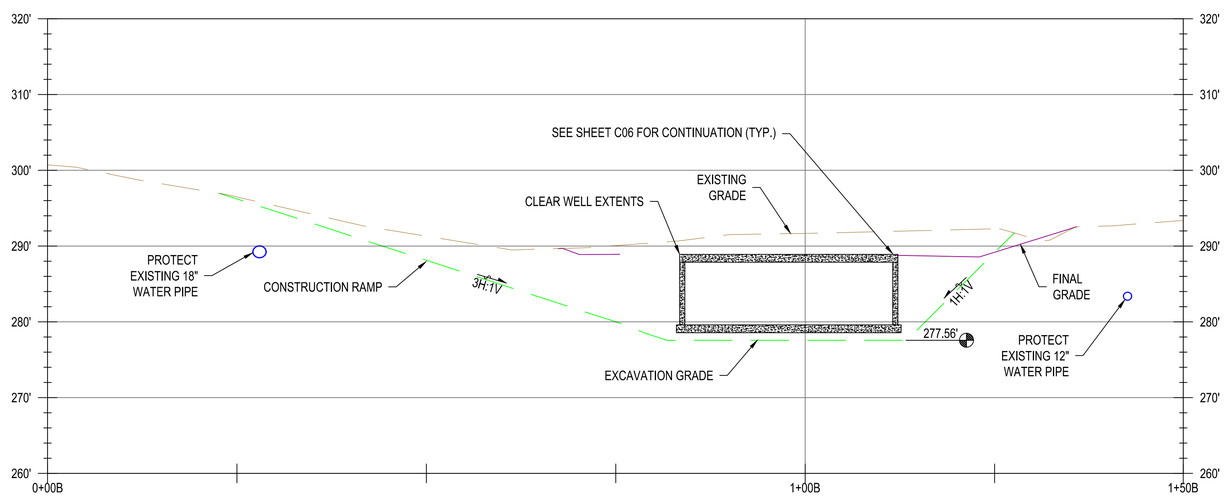

B / C03

EXCAVATION GRADING SECTION B: NORTH-SOUTH

1" = 10'

RH2

GODFREY G. DILLARD — STATE OF WASHINGTON — 31196 — REGISTERED PROFESSIONAL ENGINEER

SIGNED: 12/08/2023

CLAYTON L. PERRY — STATE OF WASHINGTON — 53766 — REGISTERED PROFESSIONAL ENGINEER

SIGNED: 12/08/2023

CITY OF BONNEY LAKE

GRAINGER SPRINGS PUMP HOUSE REPLACEMENT

BONNEY Lake

CONSTRUCTION GRADING SECTIONS

ENGINEER: PJJ | REVIEWED: CLP | SAVE DATE: Dec 3, 2023 | PLOT DATE: Dec 8, 2023 | CLIENT: BON | FILENAME: GRS-D-C03A.DWG | JOB NO: 21-0291

REVISIONS

NO.	DATE	DESCRIPTION	BY	REVIEW

SCALE: SHOWN

0" 1" 2"

DRAWING IS FULL SCALE WHEN BAR MEASURES 2"

DWG NO.: C04 | SHEET NO.: 06 / 50

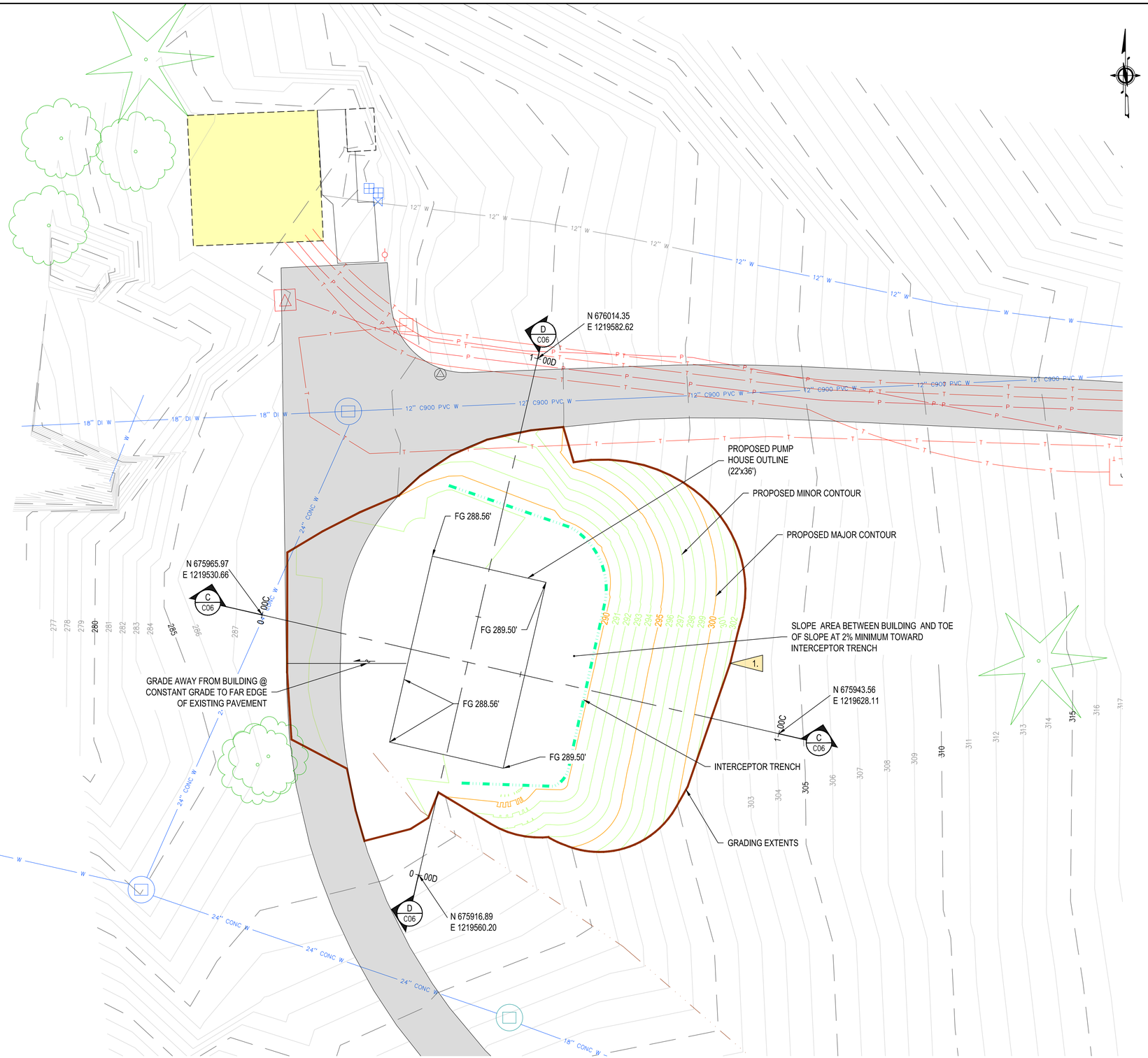

PROPOSED GRADING PLAN

1" = 10'

GRADING NOTES

1. FINAL GRADES SHALL MATCH EXISTING AT GRADING EXTENTS.

- THE CONTRACTOR SHALL TAKE ALL NECESSARY PRECAUTIONS TO PROTECT STOCKPILES, IMPORTED FILL, AND SUBGRADES FROM RAIN AND MOISTURE INTRUSION INCLUDING MEASURES TO PREVENT WICKING UP OF MOISTURE IN STOCKPILE.
- THE CONTRACTOR WILL NOT BE ENTITLED TO ANY ADDITIONAL MONIES OR WORKING DAYS DUE TO EROSION, FAILED SLOPES, OR FAILED COMPACTION TESTS AS A RESULT OF INADEQUATELY PROTECTING THE SITE FROM RAIN, STORMWATER, GROUNDWATER, AND EROSION SOURCES.

RH2

GODFREY G. DILLARD, STATE OF WASHINGTON, 31196, REGISTERED PROFESSIONAL ENGINEER

SIGNED: 12/08/2023

CLAYTON L. PERRY, STATE OF WASHINGTON, 53766, REGISTERED PROFESSIONAL ENGINEER

SIGNED: 12/08/2023

CITY OF BONNEY LAKE
GRAINGER SPRINGS
PUMP HOUSE REPLACEMENT

BONNEY Lake

PROPOSED GRADING PLAN

ENGINEER: PJJ
REVIEWED: CLP
SAVE DATE: Dec 3, 2023
PLOT DATE: Dec 8, 2023
CLIENT: BON
FILENAME: GRS-D-C03.DWG
JOB NO: 214-0291

REVISIONS

NO.	DATE	DESCRIPTION	BY	REVIEW

SCALE: SHOWN

0" 1" 2"

DRAWING IS FULL SCALE WHEN BAR MEASURES 2"

DWG NO.: C05

SHEET NO.: 07 / 50

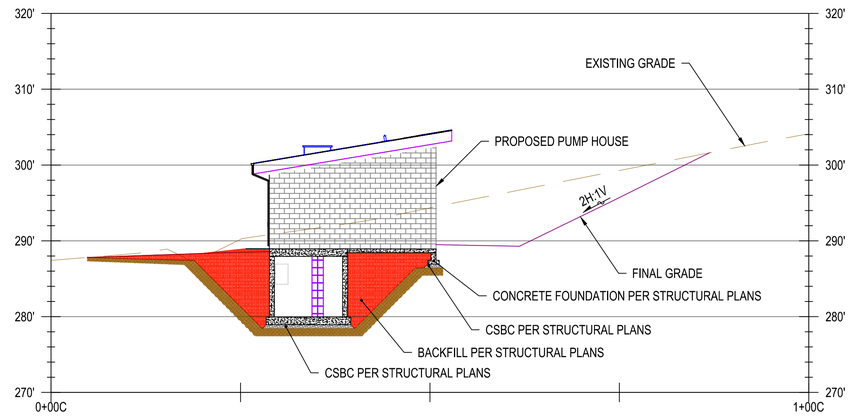

C / C05

FINAL GRADING SECTION C: EAST-WEST

1" = 10'

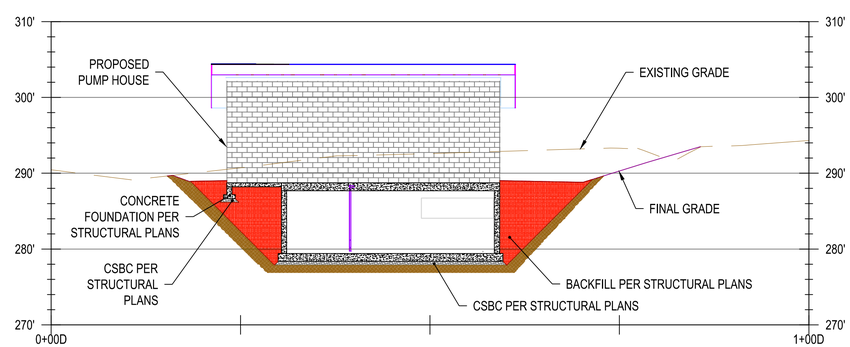

D / C05

FINAL GRADING SECTION D: NORTH-SOUTH

1" = 10'

RH2

GODFREY G. DILLARD
STATE OF WASHINGTON
31196
REGISTERED PROFESSIONAL ENGINEER

SIGNED: 12/08/2023

CLAYTON L. PASLEY
STATE OF WASHINGTON
53766
REGISTERED PROFESSIONAL ENGINEER

SIGNED: 12/08/2023

CITY OF BONNEY LAKE
GRAINGER SPRINGS
PUMP HOUSE REPLACEMENT

BONNEY Lake

PROPOSED GRADING SECTIONS

ENGINEER: PJJ
REVIEWED: CLP
SAVE DATE: Dec 3, 2023
PLOT DATE: Dec 8, 2023
CLIENT: BON
FILENAME: GRS-D-C03.DWG
JOB NO.: 21-0291

REVISIONS

NO.	DATE	DESCRIPTION	BY	REVIEW

SCALE: SHOWN

0" 1" 2"

DRAWING IS FULL SCALE WHEN BAR MEASURES 2"

DWG NO.: C06

SHEET NO.: 08 / 50

PHASING PLAN

1. CONSTRUCT IMPROVEMENTS TO THE GREATEST EXTENT POSSIBLE WITHOUT DISRUPTING SERVICE TO THE EXISTING PUMP HOUSE AND WITHOUT MAKING CONNECTIONS TO EXISTING.

2. ISOLATE EXISTING NORTH LEG COLLECTION PIPING AND MAKE NORTH CONNECTION TO EXISTING WHILE MAINTAINING PUMP HOUSE SERVICE WITH SOUTH LEG COLLECTION PIPING.

3. ISOLATE EXISTING SOUTH LEG COLLECTION PIPING AND REMOVE AND REPLACE EXISTING MANHOLE WHILE MAINTAINING PUMP HOUSE SERVICE WITH NORTH LEG COLLECTION PIPING. (NOTE: ORDER OF CONNECTIONS CAN BE SWAPPED AS LONG AS SERVICE CONTINUES).

4. MAKE PUMP DISCHARGE CONNECTION TO EXISTING. COORDINATE TEMPORARY SHUT DOWN OF EXISTING PUMP HOUSE WITH CITY.

5. MAKE DRAIN CONNECTION TO EXISTING. COORDINATE TEMPORARY SHUTDOWN OF EXISTING PUMP HOUSE WITH CITY.

6. AFTER PROPOSED IMPROVEMENTS ARE SUBSTANTIALLY COMPLETE, SHUTDOWN EXISTING PUMP HOUSE AND RELOCATE EXISTING ELECTRICAL EQUIPMENT THAT IS TO BE REUSED. CONTRACTOR SHALL BE PREPARED TO INSTALL EXISTING EQUIPMENT IN EFFICIENT MANNER AS TO MINIMIZE FACILITY DOWNTIME.

7. MAKE OVERFLOW CONNECTION TO EXISTING.

8. PERFORM STARTUP AND TESTING OF NEW FACILITY.

9. DEMOLISH EXISTING PUMP HOUSE.

10. CONTRACTOR MAY ATTEMPT MULTIPLE CONNECTIONS DURING ONE PUMP HOUSE SHUTDOWN OR MAY PROPOSE AN ALTERNATE PHASING PLAN TO MAINTAIN SERVICE TO THE EXISTING PUMP HOUSE. CONTRACTOR SHALL SUBMIT PROPOSED PHASING PLAN TO THE CITY FOR APPROVAL.

11. CONTRACTOR SHALL KEEP EXISTING PIPING CLEAN DURING CONNECTIONS AND DISINFECT NEW AND CONTAMINATED EXISTING PIPING PRIOR TO PLACING IN SERVICE.

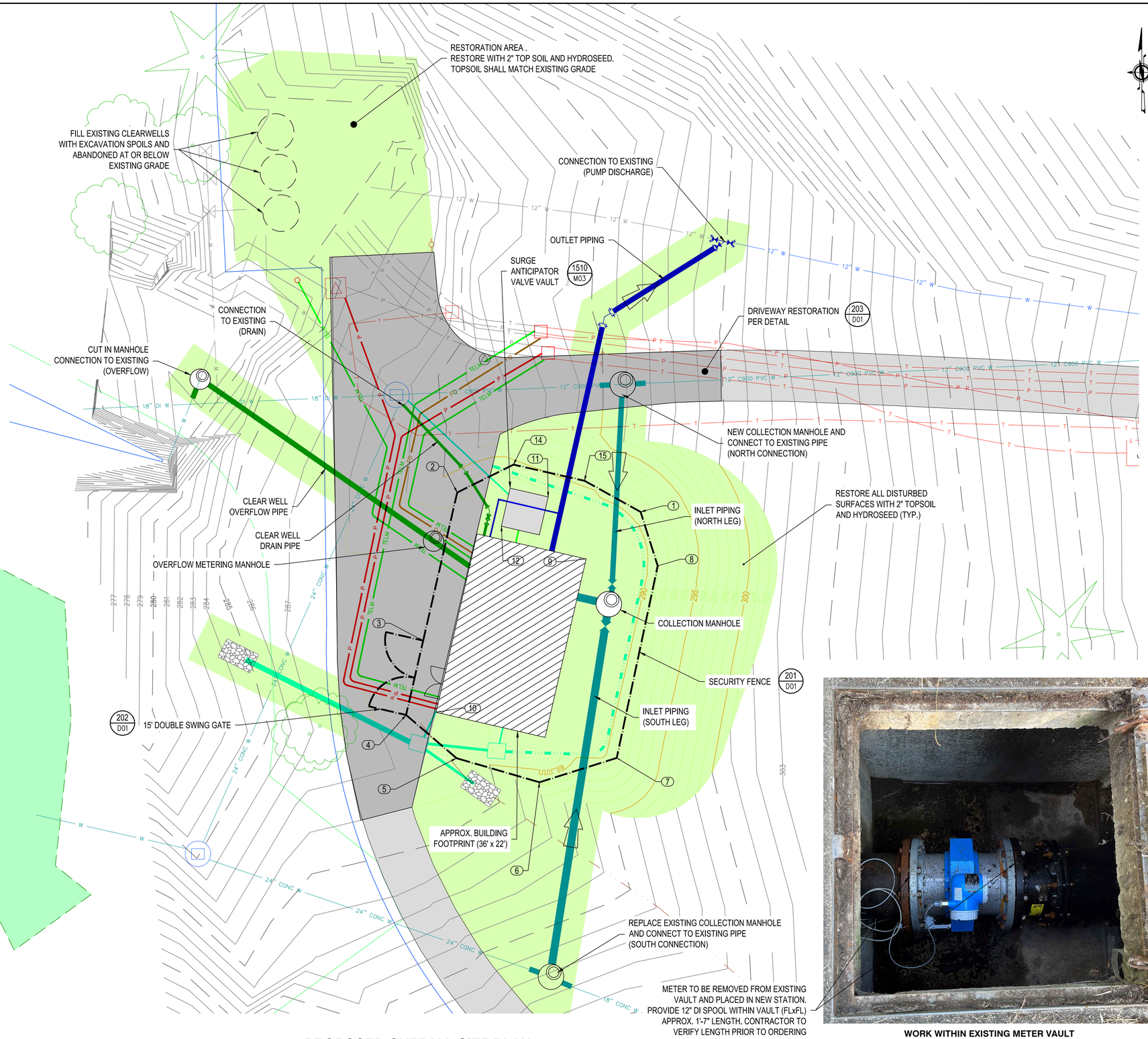

PROPOSED OVERALL SITE PLAN

1" = 10'

POINT TABLE			
POINT NO.	NORTHING	EASTING	DESCRIPTION
1	675981.37	1219594.92	FENCE CORNER
2	675985.19	1219558.84	FENCE CORNER
3	675956.07	1219552.15	FENCE CORNER
4	675941.46	1219548.79	FENCE CORNER
5	675932.96	1219558.70	FENCE CORNER
6	675928.21	1219575.02	FENCE CORNER
7	675933.00	1219590.23	FENCE CORNER
8	675970.77	1219598.28	FENCE CORNER
9	675972.13	1219584.19	BLDG CORNER
10	675941.97	1219554.68	BLDG CORNER
11	675984.33	1219576.72	VAULT CORNER
12	675978.58	1219567.53	VAULT CORNER

WORK WITHIN EXISTING METER VAULT (LOCATION PER SHEET C01)

RH2

GODFREY G. DILLARD, STATE OF WASHINGTON, 31196, REGISTERED PROFESSIONAL ENGINEER

SIGNED: 12/08/2023

CLAYTON L. POSEY, STATE OF WASHINGTON, 53766, REGISTERED PROFESSIONAL ENGINEER

SIGNED: 12/08/2023

CITY OF BONNEY LAKE
GRAINGER SPRINGS
PUMP HOUSE REPLACEMENT

BONNEY Lake

PROPOSED OVERALL SITE PLAN

ENGINEER: PJJ | SAVE DATE: Dec 8, 2023 | CLIENT: BON | JOB NO.: 21-0291
REVIEWED: CLP | PLOT DATE: Dec 11, 2023 | FILENAME: GRS-D-C04.DWG

REVISIONS

NO.	DATE	DESCRIPTION	BY	REVIEW

SCALE: SHOWN

0" 1" 2"

DRAWING IS FULL SCALE WHEN BAR MEASURES 2"

DWG NO.: C07 | SHEET NO.: 09 / 50

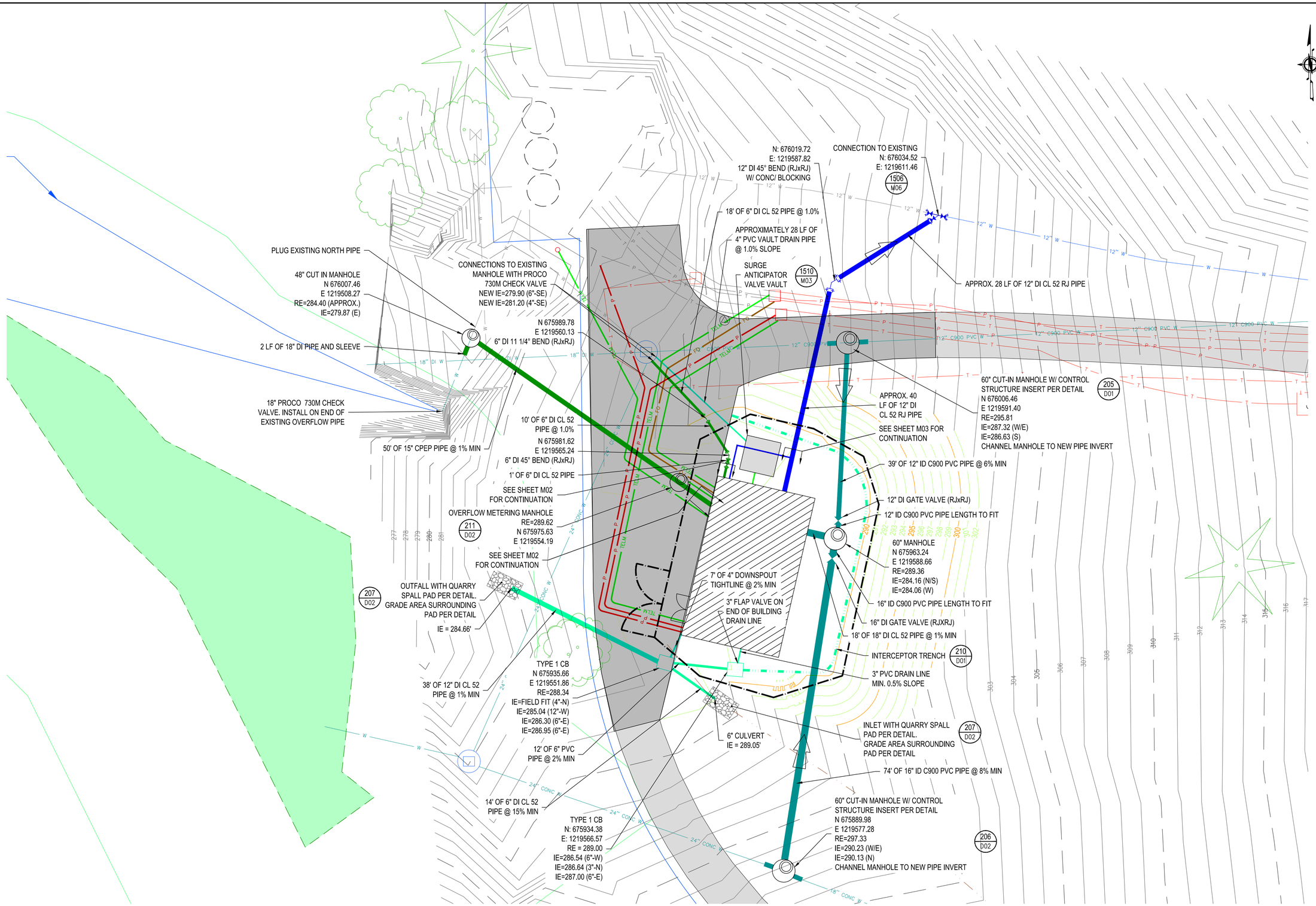

PROPOSED UTILITY PLAN

1" = 10'

RH2

GODFREY G. DILLARD, STATE OF WASHINGTON, 31196, REGISTERED PROFESSIONAL ENGINEER

SIGNED: 12/08/2023

CLAYTON L. POSEY, STATE OF WASHINGTON, 53766, REGISTERED PROFESSIONAL ENGINEER

SIGNED: 12/08/2023

CITY OF BONNEY LAKE
GRAINGER SPRINGS
PUMP HOUSE REPLACEMENT

BONNEY Lake

PROPOSED UTILITY PLAN

ENGINEER: PJJ
REVIEWED: CLP
SAVE DATE: Dec 8, 2023
PLOT DATE: Dec 8, 2023
CLIENT: BON
FILENAME: GRS-D-C04.DWG
JOB NO: 21-0291

REVISIONS

NO.	DATE	DESCRIPTION	BY	REVIEW

SCALE: SHOWN

0" 1" 2"

DRAWING IS FULL SCALE WHEN BAR MEASURES 2"

DWG NO.: C08

SHEET NO.: 10 / 50

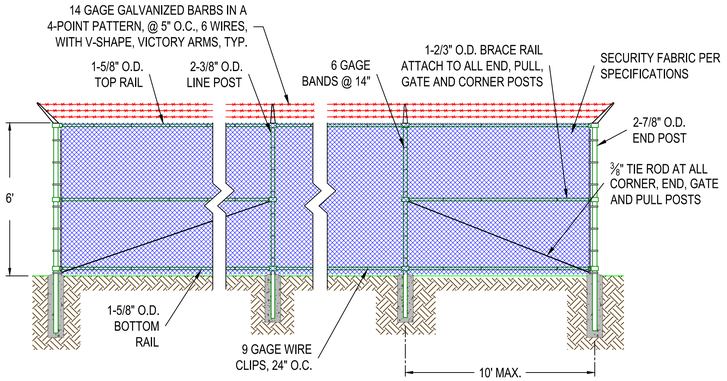

POST HOLE CONCRETE: GATE AND END POSTS	LINE POSTS
MINIMUM DEPTH=54"	48"
MINIMUM DIAMETER=18"	18"
MINIMUM POST EMBEDMENT = 24"	24"

NOTES:
1. MINIMUM DEPTHS BASED ON IBC GRAVEL OR SANDY GRAVE SOIL TYPES PER TABLE 1804.2
2. MINIMUM POST LENGTH: 8'-0"
3. SECURITY FABRIC SHALL BE PCV COATED (BLACK IN COLOR)
4. CONCRETE FOR ALL FOOTINGS SHALL BE WSDOT CLASS 4000.

201 / C07 **CHAIN LINK PERIMETER FENCE**

NOT TO SCALE

POST HOLE CONCRETE: GATE AND END POSTS (2)	LINE POSTS (2)
MIN. DEPTH = 54"	48"
MIN. DIAMETER = 18"	18"
MIN. POST EMBEDMENT = 24"	24"

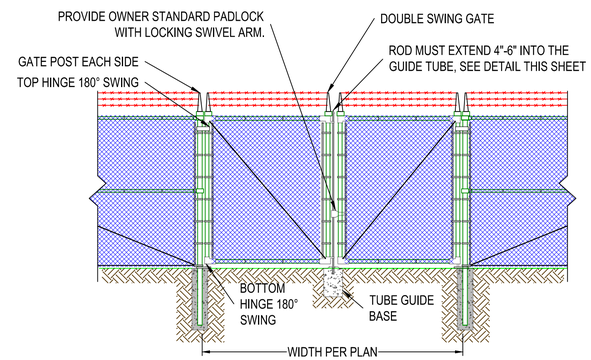

202 / C07 **MANUAL DOUBLE SWING GATE DETAIL**

NOT TO SCALE

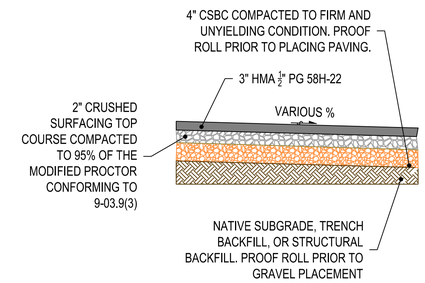

203 / C07 **ASPHALT PAVEMENT SECTION**

NOT TO SCALE

NOTES:
1. KNOCKOUTS SHALL HAVE A WALL THICKNESS OF 2" MINIMUM TO 2.5" MAXIMUM.
2. FOR PIPE ALLOWANCES SEE **WSDOT STANDARD PLAN B-10.20.**
3. PRECAST MANHOLE SECTIONS SHALL CONFORM TO ASTM C-478 AND THE SPECIFICATIONS, EXCEPT WHERE OTHERWISE NOTED. CONTRACTOR SHALL SUBMIT DESIGN DRAWINGS FOR APPROVAL.
4. ALL MANHOLE RISERS JOINTS SHALL BE RUBBER GASKET TYPE, CONFORMING TO ASTM C-443. DETAILS OF JOINTS SHALL BE SUBMITTED TO THE ENGINEER FOR APPROVAL PRIOR TO FABRICATION. JOINTS AT BASE, CONE AND ADJUSTING RINGS SHALL BE SEALED WITH MASTIC.
5. PENETRATIONS SHALL BE MADE BY CORE DRILLING AND USE OF A "KOR-N-SEAL" FLEXIBLE WATERTIGHT RUBBER BOOT.
6. ALL JOINTS SHALL BE MORTAR FILLED.

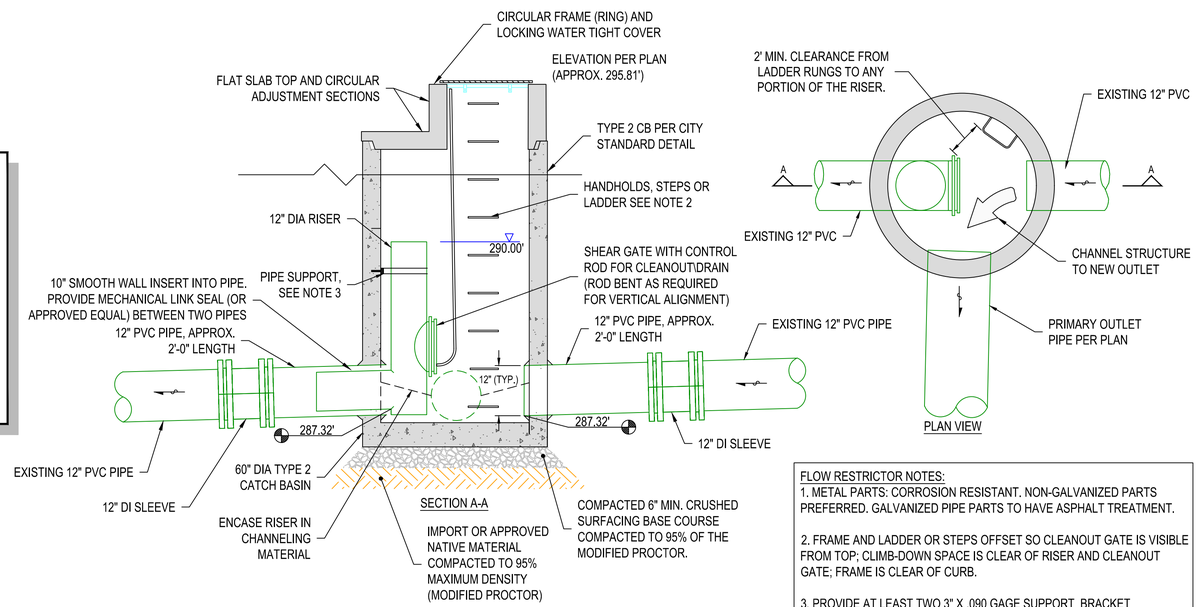

FLOW RESTRICTOR NOTES:
1. METAL PARTS: CORROSION RESISTANT. NON-GALVANIZED PARTS PREFERRED. GALVANIZED PIPE PARTS TO HAVE ASPHALT TREATMENT.

2. FRAME AND LADDER OR STEPS OFFSET SO CLEANOUT GATE IS VISIBLE FROM TOP; CLIMB-DOWN SPACE IS CLEAR OF RISER AND CLEANOUT GATE; FRAME IS CLEAR OF CURB.

3. PROVIDE AT LEAST TWO 3" X .090 GAGE SUPPORT BRACKET ANCHORED TO CONCRETE WALL. (MAXIMUM 3'-0" VERTICAL SPACING)

205 / C08 **CUT-IN MAN HOLE / CONTROL STRUCTURE DETAIL 1 (NORTH CONNECTION)**

NOT TO SCALE

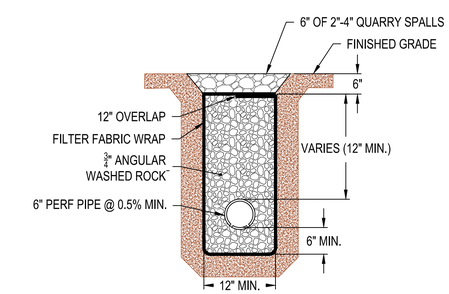

210 / C08 **INTERCEPTOR TRENCH**

NOT TO SCALE

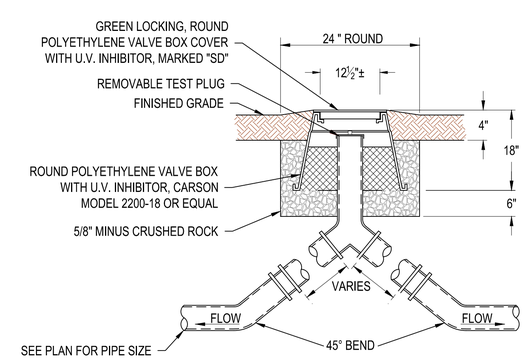

3" CLEANOUT

NOT TO SCALE

RH2

GODFREY G. DILLARD, STATE OF WASHINGTON, 31196, REGISTERED PROFESSIONAL ENGINEER

SIGNED: 12/08/2023

CLAYTON L. PARSLEY, STATE OF WASHINGTON, 53766, REGISTERED PROFESSIONAL ENGINEER

SIGNED: 12/08/2023

CITY OF BONNEY LAKE
GRAINGER SPRINGS PUMP HOUSE REPLACEMENT

BONNEY Lake

SITE DETAILS 1

JOB NO: 21-0291
CLIENT: BON
FILENAME: GRS-D-D01.DWG
SAVE DATE: Oct 18, 2023
PLOT DATE: Dec 8, 2023
ENGINEER: PJJ
REVIEWED: CLP

REVISIONS

NO.	DATE	DESCRIPTION	BY	REVIEW

SCALE: SHOWN
0" 1" 2"
DRAWING IS FULL SCALE WHEN BAR MEASURES 2"

DWG NO.: D01
SHEET NO.: 11
50

NOTES:

1. KNOCKOUTS SHALL HAVE A WALL THICKNESS OF 2" MINIMUM TO 2.5" MAXIMUM.
2. FOR PIPE ALLOWANCES SEE **WSDOT STANDARD PLAN B-10.20.**
3. PRECAST MANHOLE SECTIONS SHALL CONFORM TO ASTM C-478 AND THE SPECIFICATIONS, EXCEPT WHERE OTHERWISE NOTED. CONTRACTOR SHALL SUBMIT DESIGN DRAWINGS FOR APPROVAL.
4. ALL MANHOLE RISERS JOINTS SHALL BE RUBBER GASKET TYPE, CONFORMING TO ASTM C-443. DETAILS OF JOINTS SHALL BE SUBMITTED TO THE ENGINEER FOR APPROVAL PRIOR TO FABRICATION. JOINTS AT BASE, CONE AND ADJUSTING RINGS SHALL BE SEALED WITH MASTIC.
5. PENETRATIONS SHALL BE MADE BY CORE DRILLING AND USE OF A "KOR-N-SEAL" FLEXIBLE WATERTIGHT RUBBER BOOT.
6. ALL JOINTS SHALL BE MORTAR FILLED.

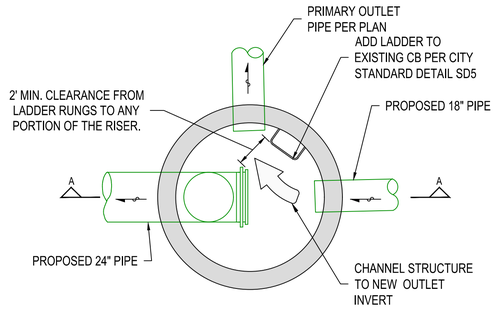

PLAN VIEW

FLOW RESTRICTOR NOTES:
1. METAL PARTS: CORROSION RESISTANT. NON-GALVANIZED PARTS PREFERRED. GALVANIZED PIPE PARTS TO HAVE ASPHALT TREATMENT.

2. FRAME AND LADDER OR STEPS OFFSET SO CLEANOUT GATE IS VISIBLE FROM TOP; CLIMB-DOWN SPACE IS CLEAR OF RISER AND CLEANOUT GATE; FRAME IS CLEAR OF CURB.

3. PROVIDE AT LEAST TWO 3" X .090 GAGE SUPPORT BRACKET ANCHORED TO CONCRETE WALL. (MAXIMUM 3'-0" VERTICAL SPACING)

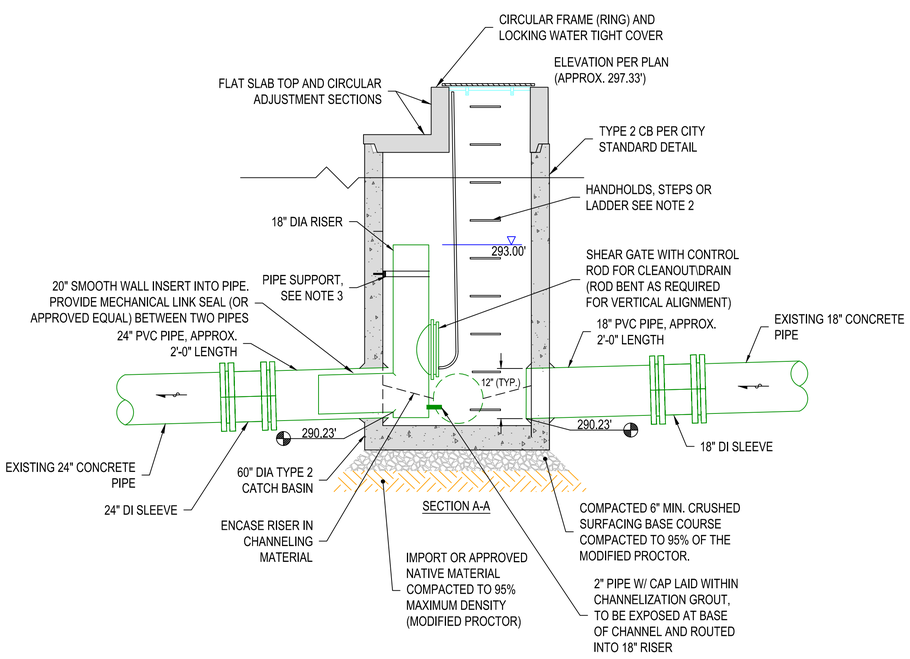

206 / C08 **CUT-IN MAN HOLE / CONTROL STRUCTURE DETAIL 2 (SOUTH CONNECTION)**

NOT TO SCALE

GRADING NOTES:
SLOPES LEADING TO PAD NOT TO EXCEED 3H:1V

PAD TO BE SLOPED AWAY FROM OUTLET PIPE WITH MINIMAL CROSS SLOPE

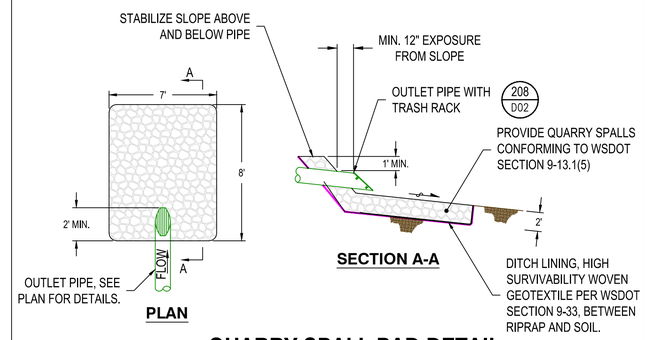

207 / C08 **QUARRY SPALL PAD DETAIL**

NOT TO SCALE

NOTES:
1. ALL STEEL PARTS MUST BE GALVANIZED AND ASPHALT COATED (TREATMENT 1 OR BETTER).

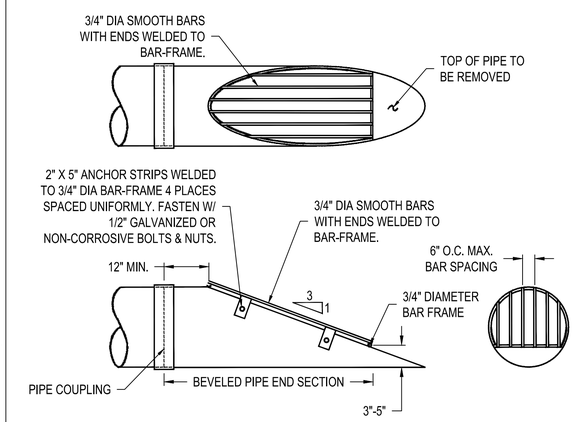

208 / D02 **BEVELED PIPE WITH TRASH RACK**

NOT TO SCALE

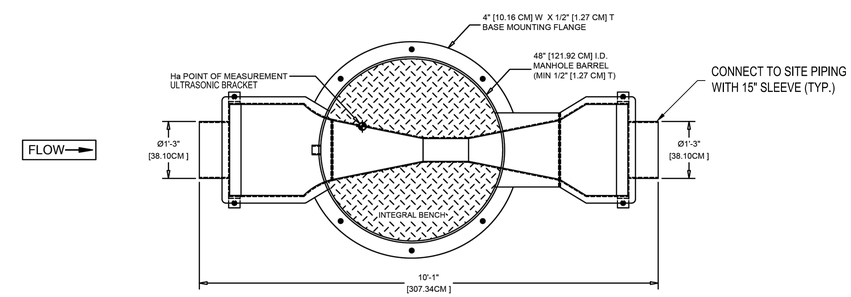

PLAN VIEW
(REDUCER TOP AND OPENING NOT SHOWN FOR CLAIRTY)

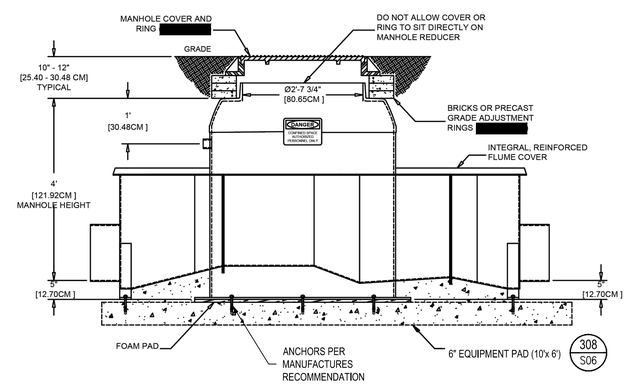

OPENCHANNELFLOW BOISE | ATLANTA	
DWG NO. PMM-4-H-P6-15P-N-S-N-B (2)	DATE 22.12.18
H-20 MANHOLE, Ø48", W/ 6" PARSHALL, Ø15" STUBS, & BENCH	
Unless otherwise indicated, dimensions are in feet and inches, with centimeters indicated in [ ]. Angles are in degrees.	

This drawing and the data contained within is the sole, confidential property of OPENCHANNELFLOW (OCF) and may not be copied, reproduced, disclosed to others, in whole or in part, without the prior written consent of OCF. OCF reserves the right to change any dimension, finish, material, or method of construction indicated on this drawing at will and without notice. This drawing is provided in confidence with the understanding it shall be returned to OCF upon demand.

211 / C08 **OVERFLOW METERING MANHOLE DETAIL**

NOT TO SCALE

RH2

GODFREY G. DILLARD, STATE OF WASHINGTON, 31196, REGISTERED PROFESSIONAL ENGINEER
SIGNED: 12/08/2023

CLAYTON L. PERRY, STATE OF WASHINGTON, 53766, REGISTERED PROFESSIONAL ENGINEER
SIGNED: 12/08/2023

CITY OF BONNEY LAKE
GRAINGER SPRINGS
PUMP HOUSE REPLACEMENT

SITE DETAILS 2

BONNEY Lake

ENGINEER: PJJ | SAVE DATE: Dec 11, 2023 | CLIENT: BON | JOB NO.: 21-0231
REVIEWED: CLP | PLOT DATE: Dec 11, 2023 | FILENAME: GRS-D-001.DWG

REVISIONS

NO.	DATE	DESCRIPTION	BY	REVIEW

SCALE: SHOWN
0" 1" 2"
DRAWING IS FULL SCALE WHEN BAR MEASURES 2"

DWG NO.: D02
SHEET NO.: 12 / 50

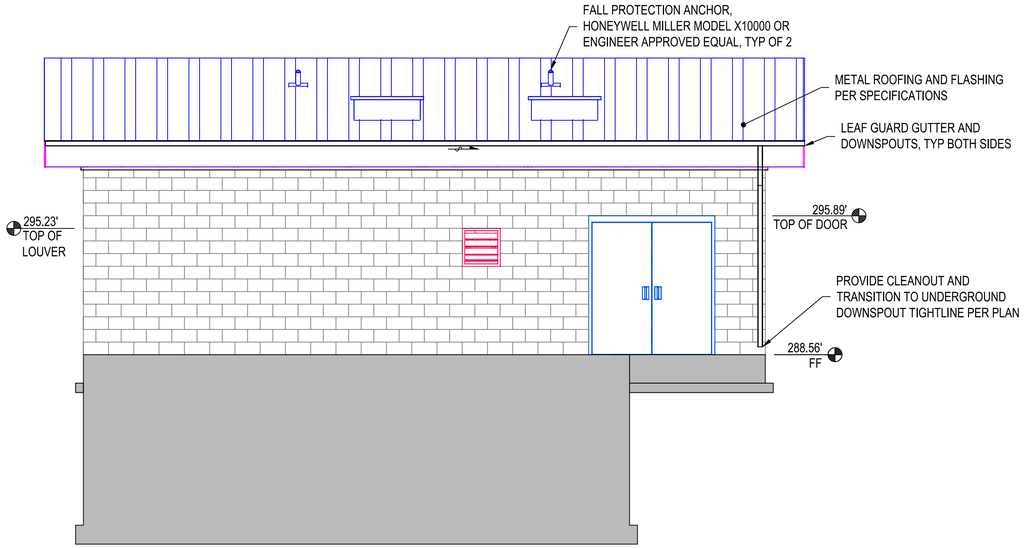

WEST ELEVATION

1/4" = 1'-0"

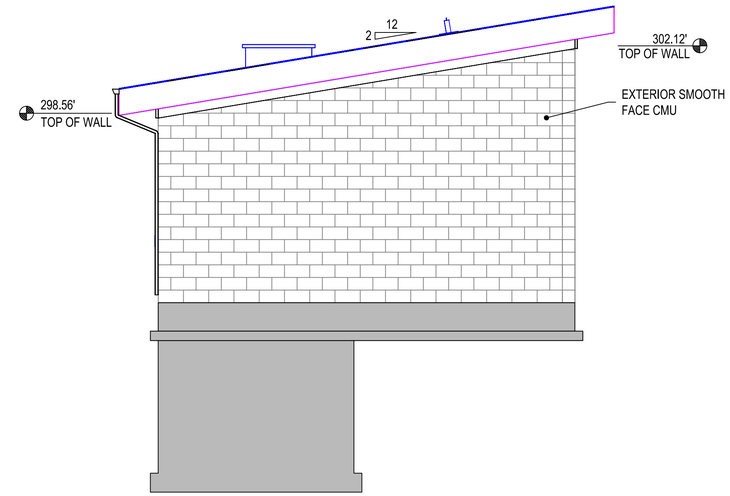

SOUTH ELEVATION

1/4" = 1'-0"

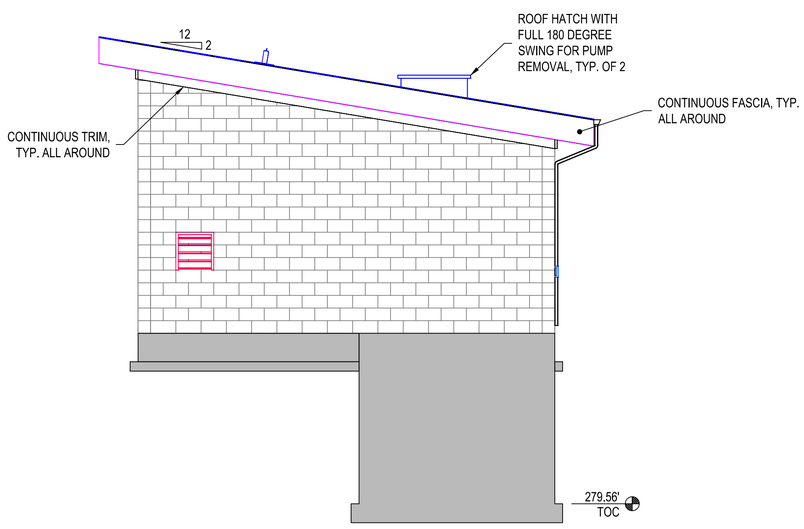

NORTH ELEVATION

1/4" = 1'-0"

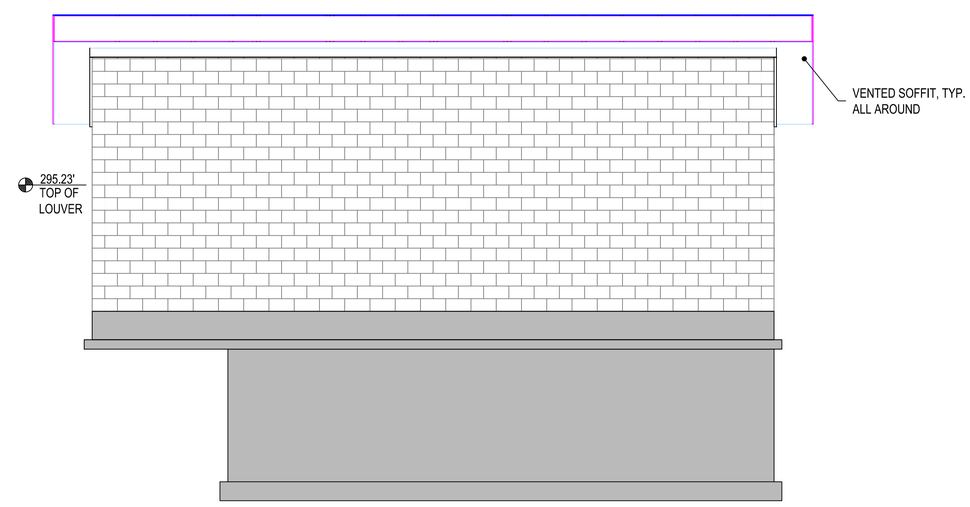

EAST ELEVATION

1/4" = 1'-0"

RH2

GODFREY G. DILLARD, STATE OF WASHINGTON, 31196, REGISTERED PROFESSIONAL ENGINEER

SIGNED: 12/08/2023

ANTON MARSHALL CONRADI, STATE OF WASHINGTON, 44672, STRUCTURAL ENGINEERING, PROFESSIONAL ENGINEER

SIGNED: 12/08/2023

CITY OF BONNEY LAKE
GRAINGER SPRINGS
PUMP HOUSE REPLACEMENT

BONNEY Lake

BUILDING ARCHITECTURAL ELEVATIONS

ENGINEER: CPC
REVIEWED: JMC
SAVE DATE: Oct 18, 2023
PLOT DATE: Dec 8, 2023
CLIENT: BON
FILENAME: GRS-DS-A01.DWG
JOB NO.: 21-0231

REVISIONS

NO.	DATE	DESCRIPTION	BY	REVIEW

SCALE: SHOWN

0" 1" 2"

DRAWING IS FULL SCALE WHEN BAR MEASURES 2"

DWG NO.: A01

SHEET NO.: 13 / 50

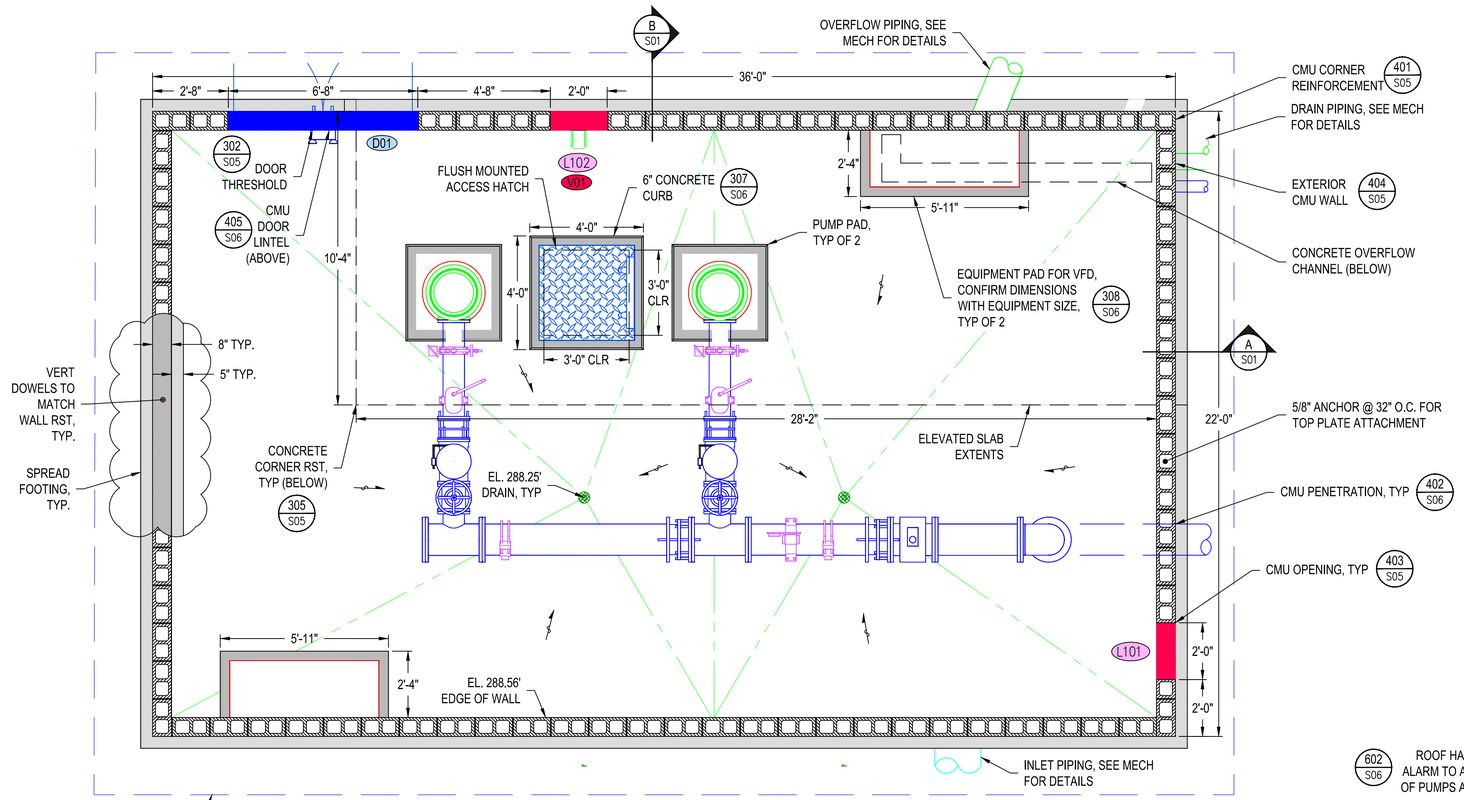

FLOOR PLAN

3/8" = 1'-0"

DOOR AND FRAME SCHEDULE

NO.	DOOR SIZE	DOOR MATERIAL	FRAME SIZE	FRAME MATERIAL
D01	6'-4" W x 7'-0" H	STEEL	6'-8" W x 7'-4" H	STEEL

NOTE: DOOR SHALL INCLUDE WEATHERSTRIPPING (ALL SIDES), KNOB OPERATOR WITH LOCK, FLUSH EXTENSION BOLTS, ASTRANGAL, LATCH GUARD, EXIT DEVICE, AND INTRUSION ALARM. DOOR HARDWARE WILL BE LEVER OPERATED.

VENTILATOR SCHEDULE

NO.	FLOW	MANUFACTURER	MODEL	FLOW RATE	ACCESSORIES
V01	EXHAUST	ACME	FQ129HI	1035 CFM	

LOUVER AND DAMPER SCHEDULE

LOUVER NO.	ROOM	FLOW	FLOW RATE	MANUFACTURER	MODEL	DAMPER	DIMENSIONS	ACCESSORIES
L101	BOOSTER PUMP ROOM	INTAKE	3931 CFM	POTTORFF	EAA-845	MOTORIZED	24" x 24"	INSECT SCREEN
L102	BOOSTER PUMP ROOM	EXHAUST	3931 CFM	POTTORFF	EAA-845	MOTORIZED	24" x 24"	INSECT SCREEN

1. LOUVER MOUNTING SLEEVE DEPTH SHALL BE 18" MAX, UNLESS OTHERWISE APPROVED IN WRITING BY ENGINEER.
2. ACOUSTICAL LOUVERS/DAMPERS SHALL HAVE 1/2" NEOPRENE GASKET INSTALLED BETWEEN CMU AND FRAME, CONTINUOUS FULL PERIMETER.

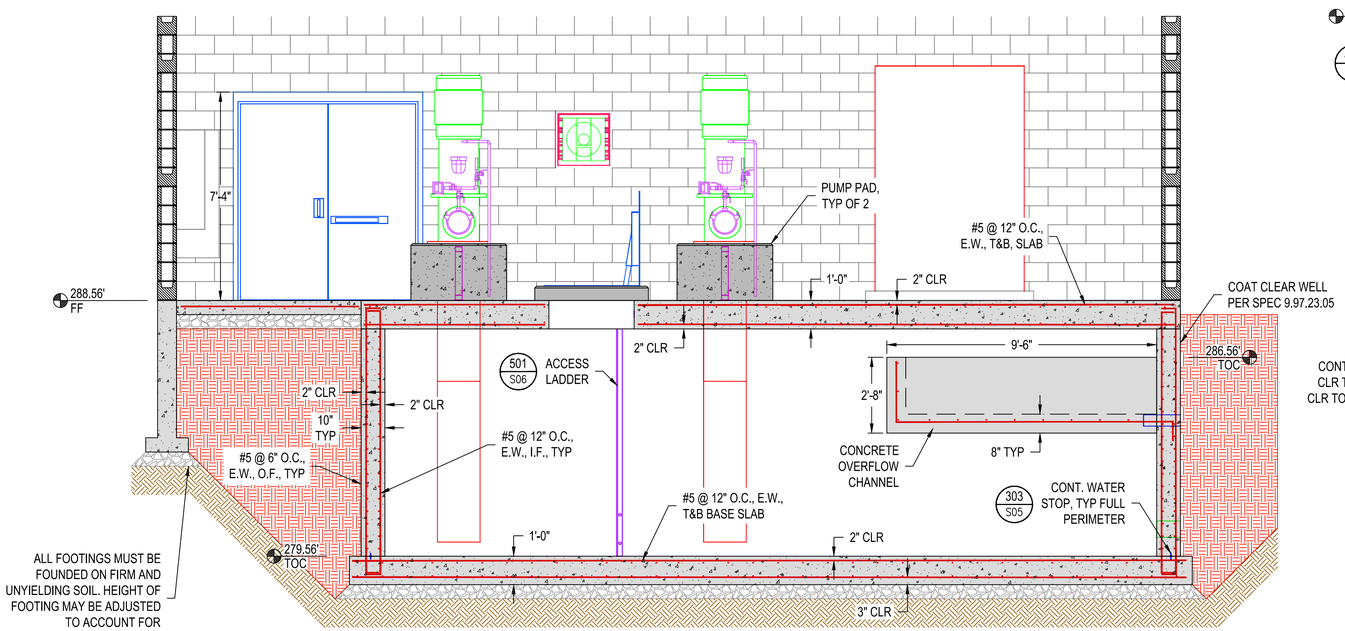

SECTION A S01

3/8" = 1'-0"

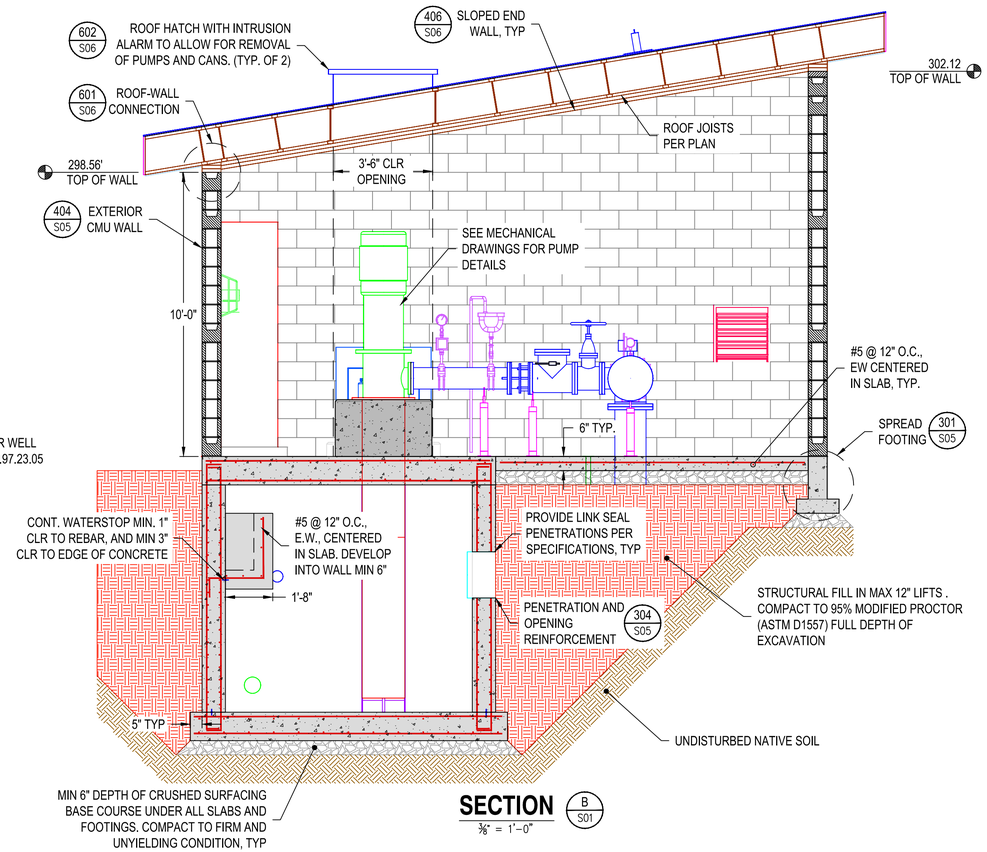

SECTION B S01

3/8" = 1'-0"

RH2

GODFREY G. DILLARD, STATE OF WASHINGTON, 31196, REGISTERED PROFESSIONAL ENGINEER

SIGNED: 12/8/2023

ALAN MARSHALL CONNER, STATE OF WASHINGTON, 44672, STRUCTURAL ENGINEER, PROFESSIONAL ENGINEER

SIGNED: 12/8/2023

CITY OF BONNEY LAKE
GRAINGER SPRINGS
PUMP HOUSE REPLACEMENT

BONNEY Lake

BUILDING FLOOR PLAN AND SECTIONS

JOB NO.: 21-0291
CLIENT: BON
FILENAME: GRS-D-S01.DWG
SAVE DATE: Dec 11, 2023
PLOT DATE: Dec 11, 2023
ENGINEER: CPC
REVIEWED: JMC

REVISIONS

NO.	DATE	DESCRIPTION	BY	REVIEW

SCALE: SHOWN

0" 1" 2"

DRAWING IS FULL SCALE WHEN BAR MEASURES 2"

DWG NO.: S01

SHEET NO.: 14 / 50

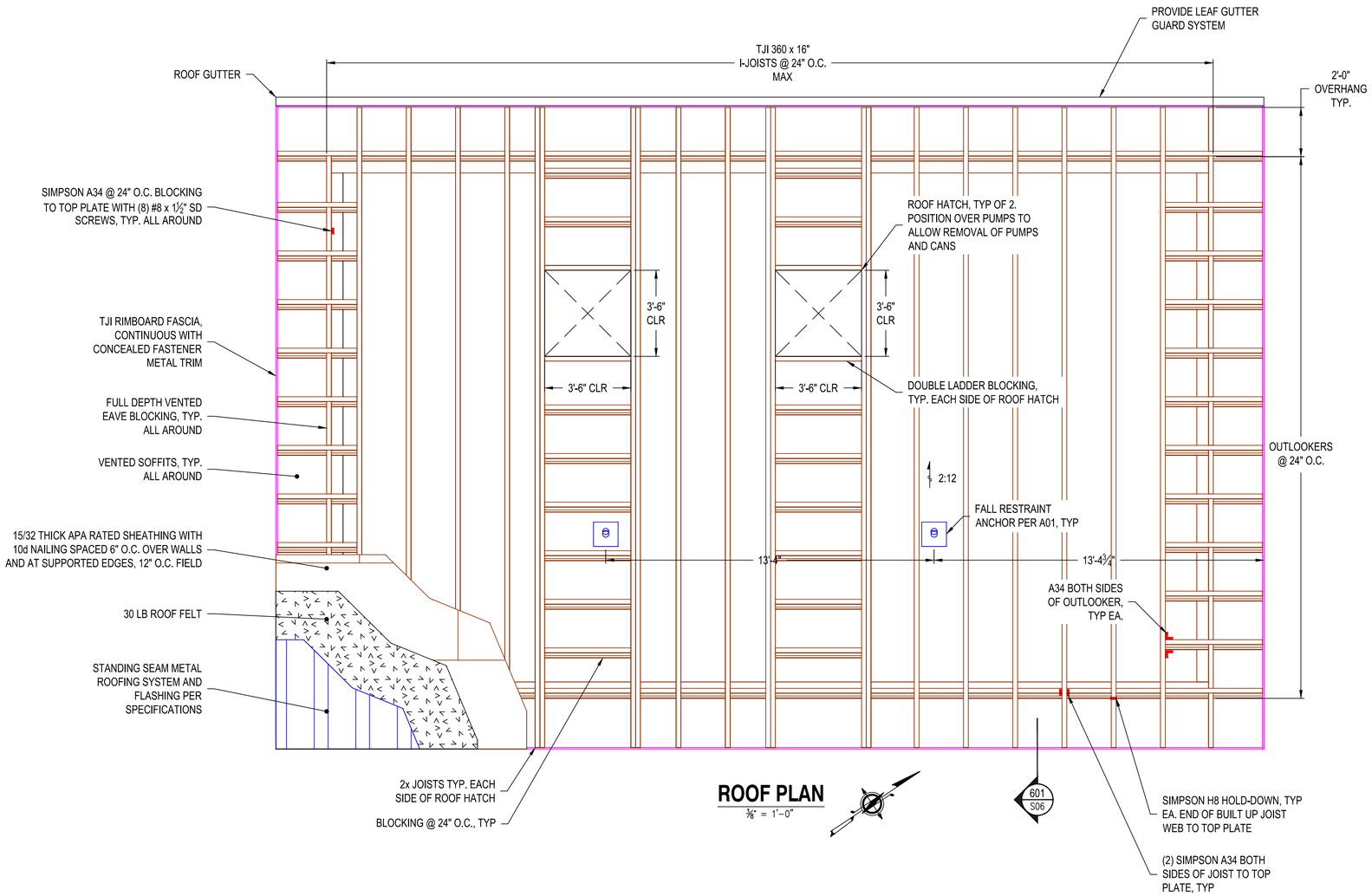

ROOF PLAN

⅜" = 1'-0"

RH2

GODFREY G. DILLARD — STATE OF WASHINGTON — 31196 — REGISTERED PROFESSIONAL ENGINEER

SIGNED: 12/8/2023

AVON MARSHALL CONNER — STATE OF WASHINGTON — 44672 — STRUCTURAL ENGINEER — PROFESSIONAL ENGINEER

SIGNED: 12/8/2023

CITY OF BONNEY LAKE
GRAINGER SPRINGS
PUMP HOUSE REPLACEMENT

BONNEY Lake

BUILDING ROOF PLAN

ENGINEER: CPC
REVIEWED: JMC
SAVE DATE: Oct 17, 2023
PLOT DATE: Dec 11, 2023
CLIENT: BON
FILENAME: GRS-D-S02.DWG
JOB NO: 21-0231

REVISIONS

NO.	DATE	DESCRIPTION	BY	REVIEW

SCALE: SHOWN

0" 1" 2"

DRAWING IS FULL SCALE WHEN BAR MEASURES 2"

DWG NO.: S02

SHEET NO.: 15 / 50

GENERAL STRUCTURAL NOTES (300 TYP.)

GENERAL:

G1. SCOPE

THE NOTES ON THIS SHEET AND THE STANDARD STRUCTURAL DETAILS ARE GENERAL AND APPLY TO THE ENTIRE PROJECT WHETHER SPECIFICALLY CALLED OUT OR NOT, EXCEPT WHERE THERE ARE SPECIFIC INDICATIONS TO THE CONTRARY ON STRUCTURAL SHEETS. IF THERE ARE QUESTIONS, THEY SHALL BE SUBMITTED TO THE STRUCTURAL ENGINEER AND ANSWERED IN WRITING PRIOR TO CONSTRUCTION.

G2. APPLICABLE SPECIFICATIONS AND CODES

ALL MATERIALS, WORKMANSHIP, DESIGN, AND CONSTRUCTION SHALL CONFORM TO THE DRAWINGS, SPECIFICATIONS, AND THE INTERNATIONAL BUILDING CODE (2018 EDITION).

A. INTERNATIONAL BUILDING CODE:	IBC 2018
B. DESIGN LOAD CRITERIA:	ASCE 7-16
C. LOCAL JURISDICTION AMENDMENTS:	CITY OF BONNEY LAKE BUILDING CRITERIA
D. CONCRETE:	ACI 318-14
E. STEEL:	AISC STEEL CONSTRUCTION MANUAL 15th
F. WOOD:	NDS 2018

G3. DESIGN CRITERIA

1. SITE LOCATION

A. LATITUDE, LONGITUDE:	47.175877N, -122.190594W

2. APPLIES TO ALL STRUCTURES (UNO)

A. DEAD LOAD:	
1. ACTUAL TRIBUTARY STRUCTURE WEIGHT	86 KIPS
B. LIVE LOAD:	
1. ELEVATED FLOORS:	50 PSF
2. WALKWAYS, STAIRS, GRATING:	100 PSF
3. SLAB ON GRADE:	250 PSF
4. ROOF:	20 PSF (NOT REDUCIBLE)
C. WIND:	
1. BASIC WIND SPEED	110 MPH
2. EXPOSURE:	B
3. IMPORTANCE FACTOR:	1.15

D. SEISMIC:

1. ABOVE GRADE, NON-WATER BEARING STRUCTURES

A. OCCUPANCY CATEGORY (USE GROUP):	UTILITY
B. RISK CATEGORY:	IV
C. IBC TYPE OF CONSTRUCTION:	V-B
D. IMPORTANCE FACTOR:	1.5
E. SPECTRAL RESPONSE ACCELERATION, Ss:	1.224g
F SPECTRAL RESPONSE COEFFICIENT, S1:	0.421g
G. SITE CLASS:	D - STIFF SOIL
H. SEISMIC DESIGN CATEGORY:	D
I. SPECTRAL RESPONSE COEFFICIENT, Sds:	0.824
J. SPECTRAL RESPONSE COEFFICIENT, Sd1:	0.527
K. BASIC SEISMIC FORCE RESISTING SYSTEM:	SPECIAL REINFORCED MASONRY
L. ANALYSIS PROCEDURE:	ELF
M. DESIGN BASE SHEAR:	21 KIP
N. SEISMIC RESPONSE COEFFICIENT:	0.247
O. RESPONSE MODIFICATION FACTOR:	5

E. SNOW LOAD:

1. GROUND SNOW LOAD:	25 PSF
2. IMPORTANCE FACTOR:	1.20

F. FLOOD CRITERIA:

1. LOWEST BUILDING FLOOR ELEVATION:	N/A
2. DRY FLOOD PROOFED ELEVATION:	N/A
3. 100-YEAR FLOOD ELEVATION:	N/A

G. FIRE-PROOFING CRITERIA

1. FIRE AREA	792 SF

G4. GEOTECHNICAL:

A. REFERENCE:	TECHNICAL MEMORANDUM BY RH2 ENGINEERING, INC.
D. REPORT DATE:	JUNE 2022
E. ALLOWABLE (NET) SOIL BEARING:	3000 PSF
F. SOIL SITE CLASS:	D
G. GROUND WATER TABLE:	N/A
H. MINIMUM FROST DEPTH:	12"

G5. SAFETY

SAFETY AND STRUCTURAL STABILITY DURING CONSTRUCTION ARE THE SOLE RESPONSIBILITY OF THE CONTRACTOR. STRUCTURES HAVE BEEN DESIGNED TO RESIST THE DESIGN LOADS ONLY AS A COMPLETED STRUCTURE.

G6. GENERAL

LINES SHOWN ON DRAWINGS MAY BE ASSOCIATED WITH CAD MODELING AND MAY NOT REPRESENT REQUIRED OR ALLOWED JOINTS. SEE DETAILS FOR CLARIFICATION ON REQUIRED AND ALLOWED JOINTS.

G7. OPENINGS

OPENINGS FOR PIPES, DUCTS, CONDUITS, ETC. ARE NOT ALL SHOWN ON THE STRUCTURAL DRAWINGS. COORDINATE AND PROVIDE OPENINGS AS REQUIRED TO ACCOMMODATE ALL WORK SHOWN OR SPECIFIED IN TECH CONTRACT DOCUMENTS AND OTHERWISE REQUIRED FOR FURNISHING OF A FUNCTIONALLY COMPLETE PROJECT. REINFORCE AROUND OPENINGS PER STANDARD STRUCTURAL DETAILS UNLESS OTHERWISE SHOWN.

G8. SPECIAL INSPECTIONS

SPECIAL INSPECTIONS ARE REQUIRED IN ACCORDANCE WITH CHAPTER 1 AND CHAPTER 17 OF THE IBC (CBC). PAYMENT FOR THESE INSPECTIONS IS NOT THE RESPONSIBILITY OF THE CONTRACTOR. THE CONTRACTOR SHALL PROVIDE FOR FULL ACCESS TO THE WORK BY THE SPECIAL INSPECTOR AND SHALL PROVIDE FOR THESE INSPECTIONS IN THEIR CONSTRUCTION SCHEDULE IN ACCORDANCE WITH THE SPECIFICATIONS. (A SPECIAL INSPECTION PLAN WILL BE SUBMITTED UNDER SEPARATE COVER WITH THE PERMIT APPLICATION) (THE SPECIAL INSPECTION PROGRAM AND STATEMENT OF SPECIAL INSPECTIONS SHALL BE IN ACCORDANCE WITH CITY OF BONNEY LAKE BUILDING DEPARTMENT)

G9. STANDARD DETAILS

THE STANDARD DETAILS DEPICT TYPICAL DETAILING TO BE USED ON THIS PROJECT. IF CONDITIONS ARE NOT EXPLICITLY SHOWN ON THE DRAWING THEY SHALL BE MADE SIMILAR TO THE STANDARD DETAILS. OBTAIN APPROVAL OF ENGINEER IN WRITING FOR SIMILAR CONDITIONS PRIOR TO CONSTRUCTION.

G10. THE CONTRACTOR SHALL FIELD VERIFY ALL DIMENSIONS AND ELEVATIONS OF EXISTING CONSTRUCTION AS REQUIRED TO COORDINATE NEW CONSTRUCTION. SUBMIT REQUIRED CHANGES FOR APPROVAL.

G11. CONTRACTOR TO SUBMIT FOR REVIEW ALL EQUIPMENT SIZES, OPERATING WEIGHTS, VIBRATION FORCES, SUPPORT LOCATIONS, ALONG WITH ANY FLOOR OPENINGS, NOTCHES, AND RECESS REQUIRED BY SUCH EQUIPMENT. CONCRETE SUPPORT PADS AND/OR FRAMING REQUIRED TO SUPPORT SAID EQUIPMENT SHALL NOT BE FABRICATED.

DEFERRED SUBMITTALS:

THE FOLLOWING ITEMS HAVE BEEN DEFERRED FOR SUBMITTAL TO THE BUILDING OFFICIAL UNTIL AFTER ISSUANCE OF THE BUILDING PERMIT:

- PREFABRICATED WOOD TRUSSES
- MECHANICAL PIPING SUPPORTS AND LATERAL BRACING
- ANCHORAGE OF ELECTRICAL EQUIPMENT

CONCRETE

C1. DESIGN STRENGTHS:

FC = 4,500 PSI

FY = 60,000 PSI

C2. CONCRETE COVER

UNLESS OTHERWISE NOTES, PROVIDE

CONCRETE COVER FOR REINFORCED CONCRETE DEPOSITED AGAINST EARTH:	3"
TIE REINFORCING AT COLS AND PILASTERS:	1 1/2"
ALL OTHERS:	2"

SEE DRAWINGS FOR EXCEPTIONS

C3. SEE SPECIFICATIONS FOR REINFORCING PLACEMENT REQUIREMENTS

C4. REFER TO OTHER DISCIPLINE DRAWINGS PRIOR TO CONSTRUCTION FOR EMBEDDED ITEMS AND PENETRATIONS NOT SHOWN ON STRUCTURAL DRAWINGS. AS REQUIRED TO ACCOMMODATE ALL WORK SHOWN OR SPECIFIED IN THE CONTRACT DOCUMENTS AND OTHERWISE REQUIRED FOR THE FURNISHING OF A FUNCTIONALLY COMPLETE PROJECT REINFORCE AROUND OPENINGS PER STANDARD STRUCTURAL DETAILS UNLESS OTHERWISE SHOWN.

C5. PROVIDE 3/4" CHAMFERS AT ALL EXPOSED EDGES (AND 1/2" CHAMFERS AT JOINTS AS SHOWN) NOT ALL CHAMFERS MAY BE SHOWN ON DRAWINGS.

C6. FIELD ADJUST REINFORCING AT OPENINGS AND EMBEDDED ITEMS AS INDICATED.

C7. ANCHOR BOLTS NOT SPECIFIED BY ENGINEER SHALL BE DESIGNED AND CERTIFIED BY A REGISTERED PROFESSIONAL ENGINEER RETAINED BY THE CONTRACTOR, IN ACCORDANCE WITH APPLICABLE PROJECT AND CODE REQUIREMENTS. SUBMIT AS A SHOP DRAWING FOR REVIEW AND APPROVAL BY THE ENGINEER. COORDINATE LOCATION, SIZE AND EMBEDMENT PRIOR TO CASTING CONCRETE.

C8. CONTINUOUS WATERSTOP SHALL BE INSTALLED IN JOINTS SUBJECT TO STATIC WATER PRESSURE.

C9. ABSOLUTELY NO WELDING OF REINFORCING BARS OR TORCHING TO BEND REINFORCING BARS SHALL BE ALLOWED WITHOUT SPECIFIC APPROVAL FROM THE STRUCTURAL ENGINEER.

C10. CONTRACTOR SHALL SUBMIT CONCRETE PLACEMENT PLAN IDENTIFYING JOINT TYPES, JOINT LOCATIONS AND CONCRETE PLACEMENT SEQUENCE.

C11. ALL CAST IN PLACE AND POST-INSTALLED ANCHOR INDICATED IN THE STRUCTURAL DOCUMENTS SHALL COMPLY WITH APPENDIX D OF ACI 318 AND CHAPTER 19 OF ALL THE IBC. ALL EXPANSION AND ADHESIVE ANCHORS SHALL HAVE THE ICC REPORT SHOWING EQUIVALENT LOAD CAPACITY. SUBMIT AND INSTALL PER THE ICC EVALUATION REPORT.

CONCRETE REINFORCEMENT SPLICE AND DEVELOPMENT SCHEDULE

	Ld, MINIMUM STRAIGHT DEVELOPMENT LENGTHS				MINIMUM LAP SPLICE LENGTHS	Ldh, MINIMUM HOOKED DEVELOPMENT LENGTHS
BAR	BOT MIN	BOT OTHER	TOP MIN	TOP OTHER	CLASS B	
#3	14"	21"	18"	27"	1.3xLd	7"
#4	18"	27"	24"	35"	1.3xLd	9"
#5	23"	34"	30"	44"	1.3xLd	12"
#6	27"	41"	35"	53"	1.3xLd	14"
#7	40"	59"	51"	77"	1.3xLd	16"
#8	45"	68"	59"	88"	1.3xLd	18"
#9	51"	76"	66"	99"	1.3xLd	21"
#10	57"	86"	74"	111"	1.3xLd	23"
#11	63"	95"	82"	123"	1.3xLd	26"

REFERENCE: ACI 318-14 CHAPTER 25

1.) REINFORCEMENT FY = 60 KSI, CONCRETE F'C = 4500 PSI

2.) REINFORCEMENT UNCOATED, NORMAL WEIGHT CONCRETE

3.) "MIN" IF: CLEAR SPACING OF BARS OR WIRES BEING DEVELOPED OR LAP SPLICED NOT LESS THAN BAR DIA., CLEAR COVER AT LEAST BAR DIA., AND STIRRUPS OR TIES THROUGHOUT Ld NOT LESS THAN CODE MIN

4.) "OTHER" IF: DOES NOT MEET REQUIREMENTS FOR MIN DEVELOPMENT LENGTH

5.) "BOT" IF: LESS THAN 12" FRESH CONCRETE PLACED BELOW HORZ. REINFORCEMENT

6.) "TOP" IF: LESS THAN 12" FRESH CONCRETE PLACED BELOW HORZ. REINFORCEMENT

7.) CONTACT ENGINEER FOR ADJUSTED PARAMETERS

MASONRY

M1. DESIGN STRENGTHS

F'm = 1,500 PSI

Fy = 60,000 PSI

M2. GROUT FOR FILLING MASONRY CAVITIES TO BE COURSE GROUT UNO. MAXIMUM COURSE AGGREGATE SIZE IS 3/8".

M3. GROUT POURS SHALL NOT EXCEED 4 FEET IN HEIGHT UNLESS CLEANOUTS ARE PROVIDED IN THE BOTTOM COURSE OF THE CELL(S) TO BE GROUTED AND WRITTEN PERMISSION IS OBTAINED FOR HIGH LIFT GROUTING.

M4. RESTRICTED BAR ANCHORAGE

IN CASES WHERE REINFORCING BAR CANNOT BE EXTENDED AS FAR AS REQUIRED, THE BARS SHALL EXTEND AS FAR AS POSSIBLE AND END IN STANDARD HOOK. SHOW ON SHOP DRAWINGS AND HIGHLIGHT WITH A BOX TO BRING TO ENGINEER'S ATTENTION.

M5. ANCHOR BOLTS

ALL EXPANSION AND ADHESIVE ANCHORS SHALL HAVE THE ICC REPORT SHOWING EQUIVALENT LOAD CAPACITY. SUBMIT AND INSTALL PER ICC EVALUATION REPORT.

M6. IF BOND BEAMS AT INTERSECTING WALLS ARE SHOWN ON THE DRAWING TO MEET AT DIFFERENT ELEVATIONS, EXTEND REINFORCING OF BOTH BOND BEAMS AROUND INTERSECTING CORNER NOT LESS THAN 4 FEET IN EACH DIRECTION.

M7. LINTEL BLOCKS SHALL NOT BE USED AS BOND BEAM BLOCKS EXCEPT AT OPENINGS WHERE BOND BEAMS AND LINTELS COINCIDE.

MASONRY REINFORCEMENT SPLICE AND DEVELOPMENT SCHEDULE

BAR	48 x BAR Ø
#3	18"
#4	24"
#5	30"
#6	36"
#7	42"
#8	48"
#9	54"

CONCRETE ANCHORS SHALL BE EITHER HILTI HIT-RE 500-V3 INJECTABLE MORTAR, SIMPSON STRONG-TIE SET-XP ANCHORING ADHESIVE, OR POWERS PE1000+ ADHESIVE ANCHORS AS SPECIFIED. WHERE SIZE IS CALLED OUT ON THE DRAWINGS, PROVIDE MINIMUM EMBEDMENT DEPTHS AS SHOWN ON THE FOLLOWING TABLES. PROVIDE MINIMUM EDGE DISTANCES AND SPACING AS SHOWN ON THE FOLLOWING TABLES UNLESS SPECIFICALLY DETAILED OTHERWISE. SPECIAL INSPECTION REQUIRED.

INSTALL ANCHORS IN STRICT ACCORDANCE WITH MANUFACTURER'S INSTRUCTIONS.

NOTIFY OWNER 48 HOURS IN ADVANCE OF INSTALLATION OF ALL ANCHORS.

WHERE SIZE IS NOT CALLED OUT, ANCHOR SHALL BE SELECTED BASED ON DESIGN LOADS. IF THE MINIMUM EDGE DISTANCE AND/OR MINIMUM SPACING CAN NOT BE ACHIEVED, REFER TO PRODUCT INFORMATION FOR REDUCTION IN ALLOWABLE LOADS.

CONCRETE ANCHORS
HILTI HIT-RE 500-V3, SIMPSON STRONG-TIE SET-XP & POWERS PE1000+

DIA. OF ROD (INCHES) OR REBAR SIZE NO.	MIN. EDGE DISTANCE (INCHES)	MIN. EMBEDMENT (INCHES)	MIN. ANCHOR SPACING (INCHES)	ALLOWABLE LOAD BASED ON BOND STRENGTH (POUNDS)	
				TENSION	SHEAR
1/2	2-1/2	2-3/4	2-1/2	1,027	2,210
5/8	3-1/8	3-1/8	3-1/8	1,312	2,827
3/4	3-3/4	3-1/2	3-3/4	1,556	3,351
7/8	4-3/8	3-1/2	4-3/8	1,556	3,351
#4	2-1/2	4-1/2	2-1/2	1,520	3,618
#5	3-1/8	5-5/8	3-1/8	1,775	5,494
#6	3-3/4	6-3/4	3-3/4	2,225	7,570
#7	4-3/8	7-7/8	4-3/8	2,440	9,428
#8	5	9	5	4,520	11,507

CONCRETE ANCHOR (306 TYP.)

STEEL

S1. DESIGN STRENGTHS:

WIDE FLANGE AND TEES:	FY = 50 KSI
PIPES: FY = 35 KSI	
STAINLESS STEEL:	FY = 33 KSI
HSS SECTIONS:	FY = 46 KSI
ALL OTHER PLATES AND SHAPES:	FY = 36 KSI

S2. DIMENSIONS

TO CENTERLINES OF COLUMNS AND BEAMS, TOP SURFACES OF BEAMS AND TUBES AND BACKS OF CHANNELS AND ANGLES, UNO.

S3. ELEVATIONS

TOP OF STEEL REFERS TO TOP OF SURFACE OF MEMBER OR FLANGE UNO.

S4. WHEN FILLET WELD SIZE IS NOT INDICATED, PROVIDE MAXIMUM WELD SIZE BASED ON MATERIAL THICKNESS IN ACCORDANCE WITH AISC SPECIFICATIONS.

S5. ALL BOLTED STRUCTURAL CONNECTIONS ARE BEARING TYPE CONNECTIONS UNLESS OTHERWISE SPECIFIED TO BE SLIP-CRITICAL. PROVIDE LOAD INDICATING WASHERS AT SLIP-CRITICAL CONNECTIONS.

S6. CONFORM TO AISC 360, STEEL CONSTRUCTION MANUAL AND AISC 341, SEISMIC DESIGN MANUAL.

WOOD

W1. TRUSSES	PER TRUSS MANUFACTURER
W2. FRAMING LUMBER	
A. STUDS:	HEM FIR
B. HEADERS:	HEM FIR
W3. FASTENERS IN TREATED LUMBER:	HOT-DIPPED GALVANIZED

ABBREVIATIONS:

AL - ALUMINUM
CHK - CHECKERED
CL - CENTERLINE
CLR - CLEAR
EA - EACH
EF - EACH FACE
FB - FLAT BAR
GALV - GALVANIZED
HORZ - HORIZONTAL
LLV - LONG LEG VERT
O.C. - ON CENTER
PL - PLATE
RB - ROUND BAR
RST - REINF. STEEL
SST - STAINLESS STEEL
T&B - TOP & BOTTOM
VERT - VERTICAL
PJF - PREMOLDED JOINT FILLER

RH2

GODFREY G. DILLARD, STATE OF WASHINGTON, 31196, REGISTERED PROFESSIONAL ENGINEER

SIGNED: 12/8/2023

JON MARSHALL CONNER, STATE OF WASHINGTON, 44672, STRUCTURAL ENGINEER, PROFESSIONAL ENGINEER

SIGNED: 12/8/2023

CITY OF BONNEY LAKE
GRAINGER SPRINGS
PUMP HOUSE REPLACEMENT

BONNEY Lake

STRUCTURAL NOTES 1

ENGINEER: CPC | SAVE DATE: Oct 17, 2023 | CLIENT: BON | JOB NO: 21-0291
REVIEWED: JMC | PLOT DATE: Dec 11, 2023 | FILENAME: GRS-D-S03.DWG

REVISIONS

NO.	DATE	DESCRIPTION	BY	REVIEW

SCALE: SHOWN

0" 1" 2"

DRAWING IS FULL SCALE WHEN BAR MEASURES 2"

DWG NO.: S03 | SHEET NO.: 16 / 50

TMS 402/602 TABLE 5 - LEVEL C QUALITY ASSURANCE - MASONRY
MINIMUM TESTS
VERIFICATION OF f'm AND f'AAC IN ACCORDANCE WITH ARTICLE 1.4 B PRIOR TO CONSTRUCTION AND FOR EVERY 5,000 SQ. FT (465 SQ. M) DURING CONSTRUCTION
VERIFICATION OF PROPORTIONS OF MATERIALS IN PREMIXED OR PREBLENDED MORTAR, PRESTRESSING GROUT, AND GROUT OTHER THAN SELF-CONSOLIDATING GROUT AS DELIVERED TO THE PROJECT SITE
VERIFICATION OF SLUMP FLOW AND VISUAL STABILITY INDEX (VSI) AS DELIVERED TO THE PROJECT SITE IN ACCORDANCE WITH ARTICLE 1.5 B.1.b.3 FOR SELF-CONSOLIDATING GROUT
MINIMUM SPECIAL INSPECTION

INSPECTION TASK	FREQUENCY(a)		REFERENCE FOR CRITERIA	
	CONTINUOUS	PERIODIC	"TMS 402/ ACI 520/ ASCE 5"	"TMS 602/ ACI 530.1/ ASCE 6"
1. VERIFY COMPLIANCE WITH THE APPROVED SUBMITTALS		X		ART. 1.5
2. VERIFY THAT THE FOLLOWING ARE IN COMPLIANCE:				
A. PROPORTIONS OF SITE-MIXED MORTAR, GROUT, AND PRESTRESSING GROUT FOR BONDED TENDONS		X		"ART. 2.1, 2.6 A, 2.6 B, 2.6 C, 2.4 G.1.b"
B. GRADE, TYPE, AND SIZE OF REINFORCEMENT AND ANCHOR BOLTS, AND PRESTRESSING TENDONS AND ANCHORAGES		X	SEC. 6.1	ART. 2.4, 3.4
C. PLACEMENT OF MASONRY UNITS AND CONSTRUCTION OF MORTAR JOINTS		X		ART. 3.3 B
D. PLACEMENT OF REINFORCEMENT, CONNECTORS, AND PRESTRESSING TENDONS AND ANCHORAGES	X		SEC. 6.1, 6.2.1, 6.2.6, 6.2.7	"ART. 3.2 E, 3.4, 3.6 A"
E. GROUT SPACE PRIOR TO GROUTING	X			ART. 3.2 D, 3.2 F
F. PLACEMENT OF GROUT AND PRESTRESSING GROUT FOR BONDED TENDONS	X			ART. 3.5, 3.6 C
G. SIZE AND LOCATION OF STRUCTURAL ELEMENTS		X		ART. 3.3 F
H. TYPE, SIZE, AND LOCATION OF ANCHORS INCLUDING OTHER DETAILS OF ANCHORAGE OF MASONRY TO STRUCTURAL MEMBERS, FRAMES OR OTHER CONSTRUCTION	X		SEC. 1.2.1(e), 6.1.4.3, 6.2.1	
I. WELDING OF REINFORCEMENT	X		SEC. 8.1.6.7.2, 9.3.3.4 (c), 11.3.3.4(b)	
J. PREPARATION, CONSTRUCTION, AND PROTECTION OF MASONRY DURING COLD WEATHER (TEMPERATURE BELOW 40°F (4.4°C)) OR HOT WEATHER (TEMPERATURE ABOVE 90°F (32.2°C))		X		ART. 1.8 C, 1.8 D
K. APPLICATION AND MEASUREMENT OF PRESTRESSING FORCE	X			ART. 3.6 B
L. PLACEMENT OF AAC MASONRY UNITS AND CONSTRUCTION OF THIN-BED MORTAR JOINTS	X			ART. 3.3 B.9, 3.3 F.1.b
M. PROPERTIES OF THIN-BED MORTAR FOR AAC MASONRY	X			ART. 2.1 C.1
3. OBSERVE PREPARATION OF GROUT SPECIMENS, MORTAR SPECIMENS, AND/OR PRISMS	X			"ART. 1.4 B.2.a.3, 1.4 B.2.b.3, 1.4 B.2.c.3, 1.4 B.3, 1.4 B.4"

(a) FREQUENCY REFERS TO THE FREQUENCY OF SPECIAL INSPECTION, WHICH MAY BE CONTINUOUS DURING THE TASK LISTED OR PERIODIC DURING THE LISTED TASK, AS DEFINED IN THE TABLE.

IBC TABLE 1705.6		
REQUIRED SPECIAL INSPECTIONS AND TESTS OF SOILS		
TYPE	CONTINUOUS SPECIAL INSPECTION	PERIODIC SPECIAL INSPECTION
1. VERIFY MATERIALS BELOW SHALLOW FOUNDATIONS ARE ADEQUATE TO ACHIEVE THE DESIGN BEARING CAPACITY.	---	X
2. VERIFY EXCAVATIONS ARE EXTENDED TO PROPER DEPTH AND HAVE REACHED PROPER MATERIAL.	---	X
3. PERFORM CLASSIFICATION AND TESTING OF COMPACTED FILL MATERIALS.	---	X
4. VERIFY USE OF PROPER MATERIALS, DENSITIES AND LIFT THICKNESS DURING PLACEMENT AND COMPACTION OF COMPACTED FILL.	X	---
5. PRIOR TO PLACEMENT OF COMPACTED FILL, INSPECT SUBGRADE AND VERIFY THAT SITE HAS BEEN PREPARED PROPERLY.	---	X

IBC TABLE 1705.3				
REQUIRED SPECIAL INSPECTIONS AND TESTS OF CONCRETE CONSTRUCTION				
TYPE	CONTINUOUS SPECIAL INSPECTION	PERIODIC SPECIAL INSPECTION	REFERENCED STANDARD (A)	IBC REFERENCE
1. INSPECT REINFORCEMENT, INCLUDING PRESTRESSING TENDONS, AND VERIFY PLACEMENT.	---	X	ACI 318 CH. 20, 25.2, 25.3, 26.5.1-26.5.3	1908.4
2. REINFORCING BAR WELDING:				
A. VERIFY WELDABILITY OF REINFORCING BARS OTHER THAN ASTM A 706;	---	X	AWS D1.4	
B. INSPECT SINGLE-PASS FILLET WELDS, MAXIMUM 5/16"; AND		X	ACI 318: 26.5.4	---
C. INSPECT ALL OTHER WELDS.	X			
3. INSPECT ANCHORS CAST IN CONCRETE	---	X	ACI 318: 17.8.2	---
4. INSPECT ANCHORS POST-INSTALLED IN HARDENED CONCRETE MEMBERS. (B)				
A. ADHESIVE ANCHORS INSTALLED IN HORIZONTALLY OR UPWARDLY INCLINED ORIENTATIONS TO RESIST SUSTAINED TENSION LOADS.	X		ACI 318: 17.8.2.4	---
B. MECHANICAL ANCHORS AND ADHESIVE ANCHORS NOT DEFINED IN 4.A.		X	ACI 318: 17.8.2	
5. VERIFY USE OF REQUIRED DESIGN MIX.	---	X	ACI 318: CH. 19, 26.4.3, 26.4.4	1904.1, 1904.2, 1908.2, 1908.3
6. PRIOR TO CONCRETE PLACEMENT, FABRICATE SPECIMENS FOR STRENGTH TESTS, PERFORM SLUMP AND AIR CONTENT TESTS, AND DETERMINE THE TEMPERATURE OF THE CONCRETE.	X	---	"ASTM C 172 ASTM C 31 ACI 318: 26.4.5, 26.12"	1908.10
7. INSPECT CONCRETE AND SHOTCRETE PLACEMENT FOR PROPER APPLICATION TECHNIQUES.	X	---	ACI 318: 26.4.5	1908.6, 1908.7, 1908.8
8. VERIFY MAINTENANCE OF SPECIFIED CURING TEMPERATURE AND TECHNIQUES.	---	X	ACI 318: 26.4.7-26.4.9	1908.9
9. INSPECT PRESTRESSED CONCRETE FOR:				
A. APPLICATION OF PRESTRESSING FORCES; AND	X	---	ACI 318: 26.9.2.1	---
B. GROUTING OF BONDED PRESTRESSING TENDONS.	X	---	ACI 318: 26.9.2.3	
10. INSPECT ERECTION OF PRECAST CONCRETE MEMBERS.	---	X	ACI 318: CH. 26.8	---
11. VERIFY IN-SITU CONCRETE STRENGTH, PRIOR TO STRESSING OF TENDONS IN POST-TENSIONED CONCRETE AND PRIOR TO REMOVAL OF SHORES AND FORMS FROM BEAMS AND STRUCTURAL SLABS.	---	X	ACI 318: 26.10.2	---
12. INSPECT FORMWORK FOR SHAPE, LOCATION AND DIMENSIONS OF THE CONCRETE MEMBER BEING FORMED.	---	X	ACI 318: 26.10.1(B)	---

FOR SI: 1 INCH = 25.4 MM.

A. WHERE APPLICABLE, SEE ALSO SECTION 1705.12, SPECIAL INSPECTIONS

B. SPECIFIC REQUIREMENTS FOR SPECIAL INSPECTION SHALL BE INCLUDED IN THE RESEARCH REPORT FOR THE ANCHOR ISSUED BY AN APPROVED SOURCE IN ACCORDANCE WITH 17.8.2 IN ACI 318, OR OTHER QUALIFICATION PROCEDURES. WHERE SPECIFIC REQUIREMENTS ARE NOT PROVIDED, SPECIAL INSPECTION REQUIREMENTS SHALL BE SPECIFIED BY THE REGISTERED DESIGN PROFESSIONAL AND SHALL BE APPROVED BY THE BUILDING OFFICIAL PRIOR TO THE COMMENCEMENT OF THE WORK.

RH2

GODFREY G. DILL JR. STATE OF WASHINGTON 31196 REGISTERED PROFESSIONAL ENGINEER

SIGNED: 12/8/2023

ANTON MARSHALL CONRAD STATE OF WASHINGTON 44672 REGISTERED STRUCTURAL ENGINEER PROFESSIONAL ENGINEER

SIGNED: 12/8/2023

CITY OF BONNEY LAKE
GRAINGER SPRINGS
PUMP HOUSE REPLACEMENT

BONNEY Lake

STRUCTURAL NOTES 2

ENGINEER: CPC
REVIEWED: JMC
SAVE DATE: Oct 17, 2023
PLOT DATE: Dec 11, 2023
CLIENT: BON
FILENAME: GRS-D-S03.DWG
JOB NO: 21-0231

REVISIONS

NO.	DATE	DESCRIPTION	BY	REVIEW

SCALE: SHOWN

0" 1" 2"

DRAWING IS FULL SCALE WHEN BAR MEASURES 2"

DWG NO.: S04

SHEET NO.: 17 / 50

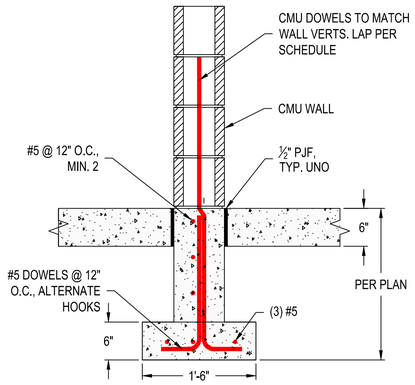

TYPICAL FOOTING

SPREAD FOOTING (301 TYP)

1" = 1'-0"

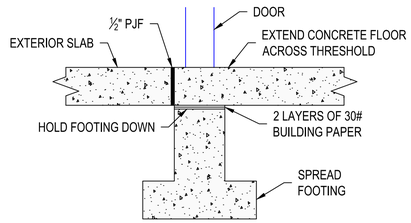

DOOR THRESHOLD (302 TYP)

1" = 1'-0"

NOTE: THIS DETAIL IS ONLY REQUIRED WHERE THERE IS A WATERSTOP. NOT REQUIRED ELSEWHERE.

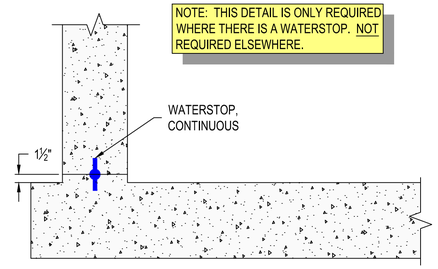

TYPICAL WALL/SLAB JOINT DETAIL (303 TYP)

1" = 1'-0"

NOTE: NOT ALL PENETRATIONS ARE SHOWN ON STRUCTURAL PLANS.

NOTE: THIS DETAIL USED FOR SINGLE PENETRATIONS 4" IN DIAMETER AND LARGER, AND IN EQUIVALENT GROUPS OF SMALLER DIAMETER PENETRATIONS. REFER TO MECHANICAL PLANS FOR SIZE AND LOCATION OF PIPE PENETRATIONS.

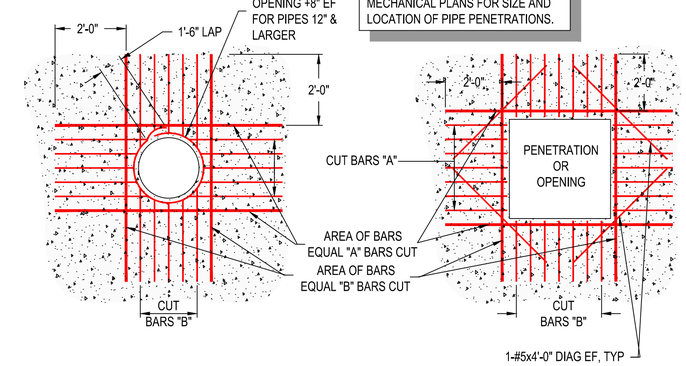

PENETRATION AND OPENING REINFORCEMENT (304 TYP)

NOT TO SCALE

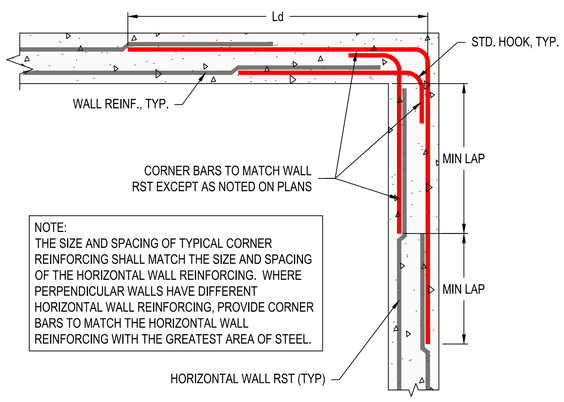

NOTE:
THE SIZE AND SPACING OF TYPICAL CORNER REINFORCING SHALL MATCH THE SIZE AND SPACING OF THE HORIZONTAL WALL REINFORCING. WHERE PERPENDICULAR WALLS HAVE DIFFERENT HORIZONTAL WALL REINFORCING, PROVIDE CORNER BARS TO MATCH THE HORIZONTAL WALL REINFORCING WITH THE GREATEST AREA OF STEEL.

TYPICAL CONCRETE WALL INTERSECTION / CORNER (305 TYP)

1" = 1'-0"

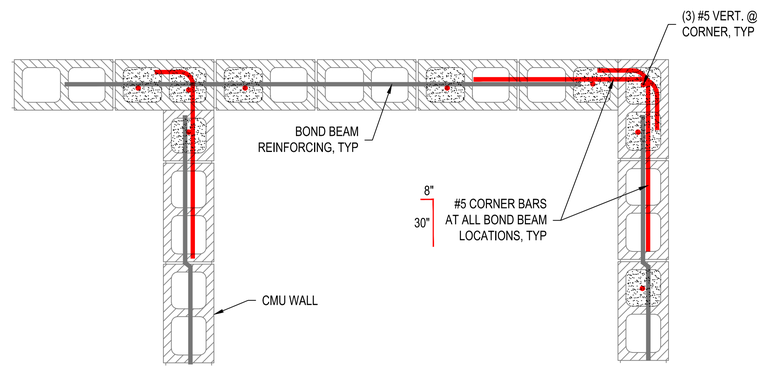

CMU WALL INTERSECTION / CORNER (401 TYP)

1" = 1'-0"

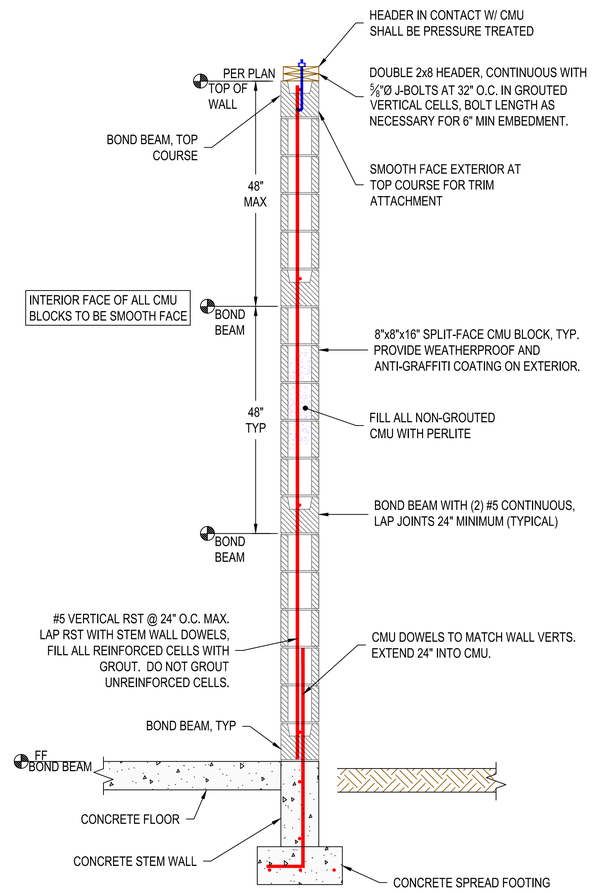

EXTERIOR CMU WALL (404 TYP)

NOT TO SCALE

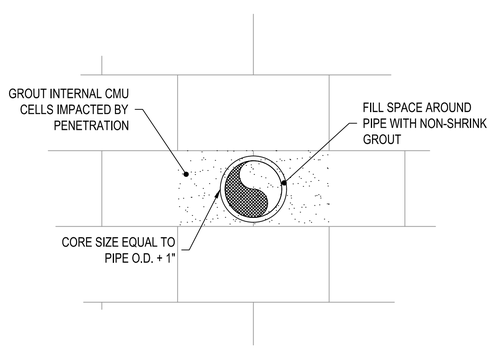

CMU PENETRATION (402 TYP)

NOT TO SCALE

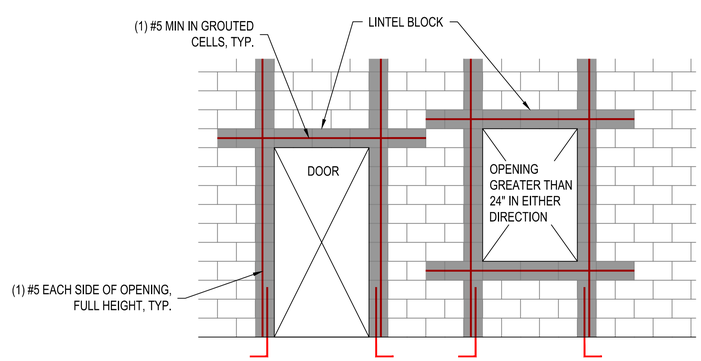

TYPICAL CMU OPENING (403 TYP)

NOT TO SCALE

RH2

GEOFFREY G. DILLMAN, STATE OF WASHINGTON, 31196, REGISTERED PROFESSIONAL ENGINEER

SIGNED: 12/8/2023

JON MARSHALL CONRAD, STATE OF WASHINGTON, 44672, STRUCTURAL ENGINEER, PROFESSIONAL ENGINEER

SIGNED: 12/8/2023

CITY OF BONNEY LAKE
GRAINGER SPRINGS
PUMP HOUSE REPLACEMENT

BONNEY Lake

STRUCTURAL DETAILS 1

ENGINEER: CPC | SAVE DATE: Oct 17, 2023 | CLIENT: BON | JOB NO.: 21-0231
REVIEWED: JMC | PLOT DATE: Dec 11, 2023 | FILENAME: GRS-D-S05.DWG

REVISIONS

NO.	DATE	DESCRIPTION	BY	REVIEW

SCALE: SHOWN

0" 1" 2"

DRAWING IS FULL SCALE WHEN BAR MEASURES 2"

DWG NO.: S05 | SHEET NO.: 18 / 50

NOTE:
DOOR FRAME OF SOUND RATED DOORS SHALL BE FULLY GROUTED.

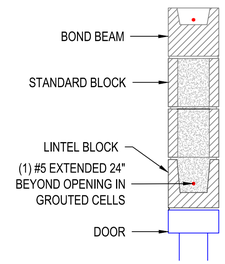

TYPICAL DOOR LINTEL (405 TYP)

1" = 1'-0"

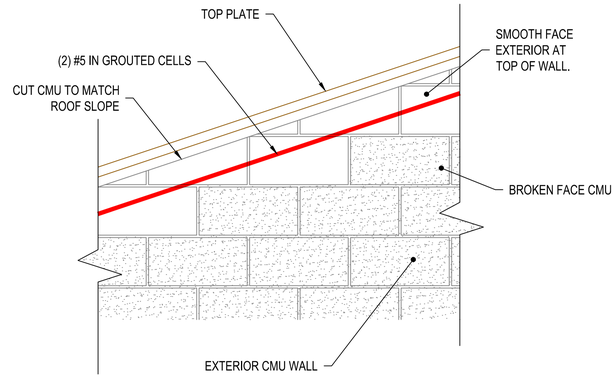

SLOPED END WALL DETAIL (406 TYP)

1" = 1'-0"

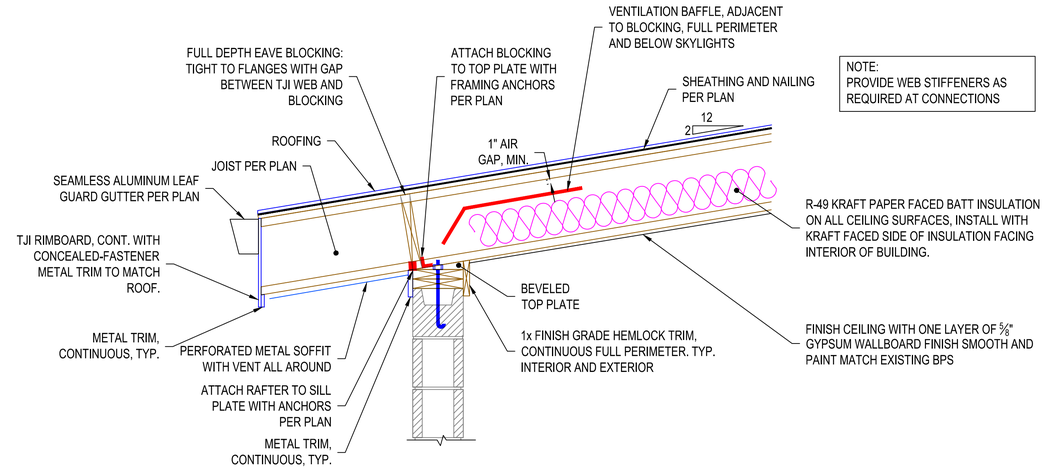

NOTE:
PROVIDE WEB STIFFENERS AS REQUIRED AT CONNECTIONS

TYPICAL WALL/RAFTER CONNECTION (601 TYP)

1" = 1'-0"

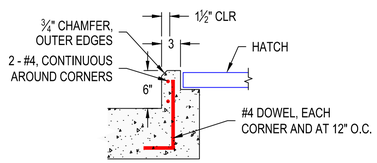

ACCESS HATCH CURB (307 TYP)

1" = 1'-0"

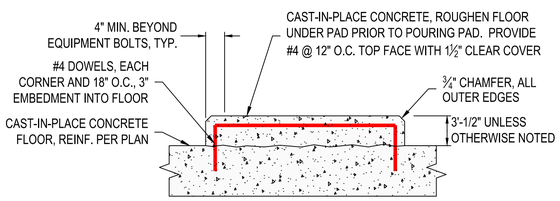

EQUIPMENT PAD (308 TYP)

1" = 1'-0"

ROOF HATCH NOTES:
- ROOF HATCH FINISH SHALL BE ALUMINUM.
- PROVIDE ROOF CURB SUCH THAT THE HATCH IS INSTALLED LEVEL.
- HATCH SHALL BE DESIGNED TO WITHSTAND A MIN SNOW LOAD OF 25 PSF AND A MAX DEFLECTION OF 1/190 OF THE SPAN. MAX UPLIFT PRESSURE OF 50 PSF.
- HATCH SHALL OPEN 180 DEGREES

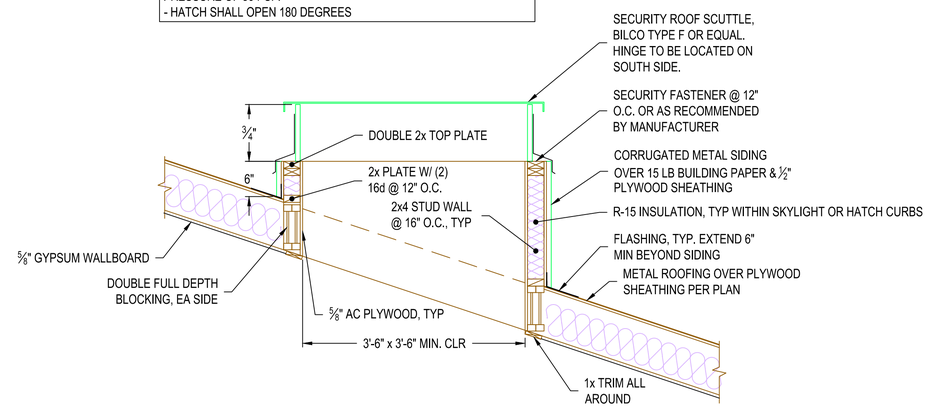

ROOF HATCH FRAMING (602 TYP)

3/4" = 1'-0"

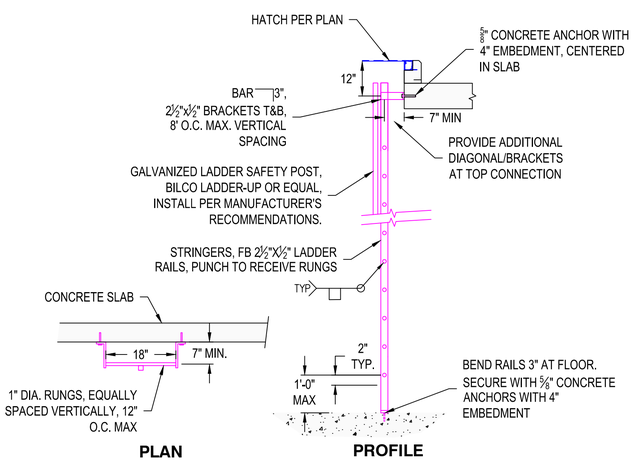

TYPICAL LADDER DETAIL (501 TYP)

NOT TO SCALE

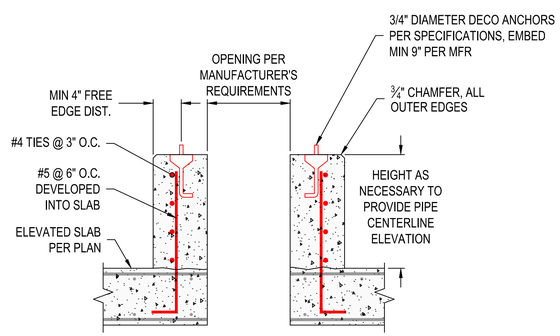

SECTION

PUMP PAD (X X000)

NOT TO SCALE

RH2

SIGNED: 12/8/2023

SIGNED: 12/8/2023

CITY OF BONNEY LAKE
GRAINGER SPRINGS
PUMP HOUSE REPLACEMENT

STRUCTURAL DETAILS 2

ENGINEER: CPC | REVIEWED: JMC | SAVE DATE: Oct 17, 2023 | PLOT DATE: Dec 11, 2023 | CLIENT: BON | FILENAME: GRS-D-S05.DWG | JOB NO: 21-0291

REVISIONS

NO.	DATE	DESCRIPTION	BY	REVIEW

SCALE: SHOWN

0" 1" 2"

DRAWING IS FULL SCALE WHEN BAR MEASURES 2"

DWG NO.: S06

SHEET NO.: 19 / 50

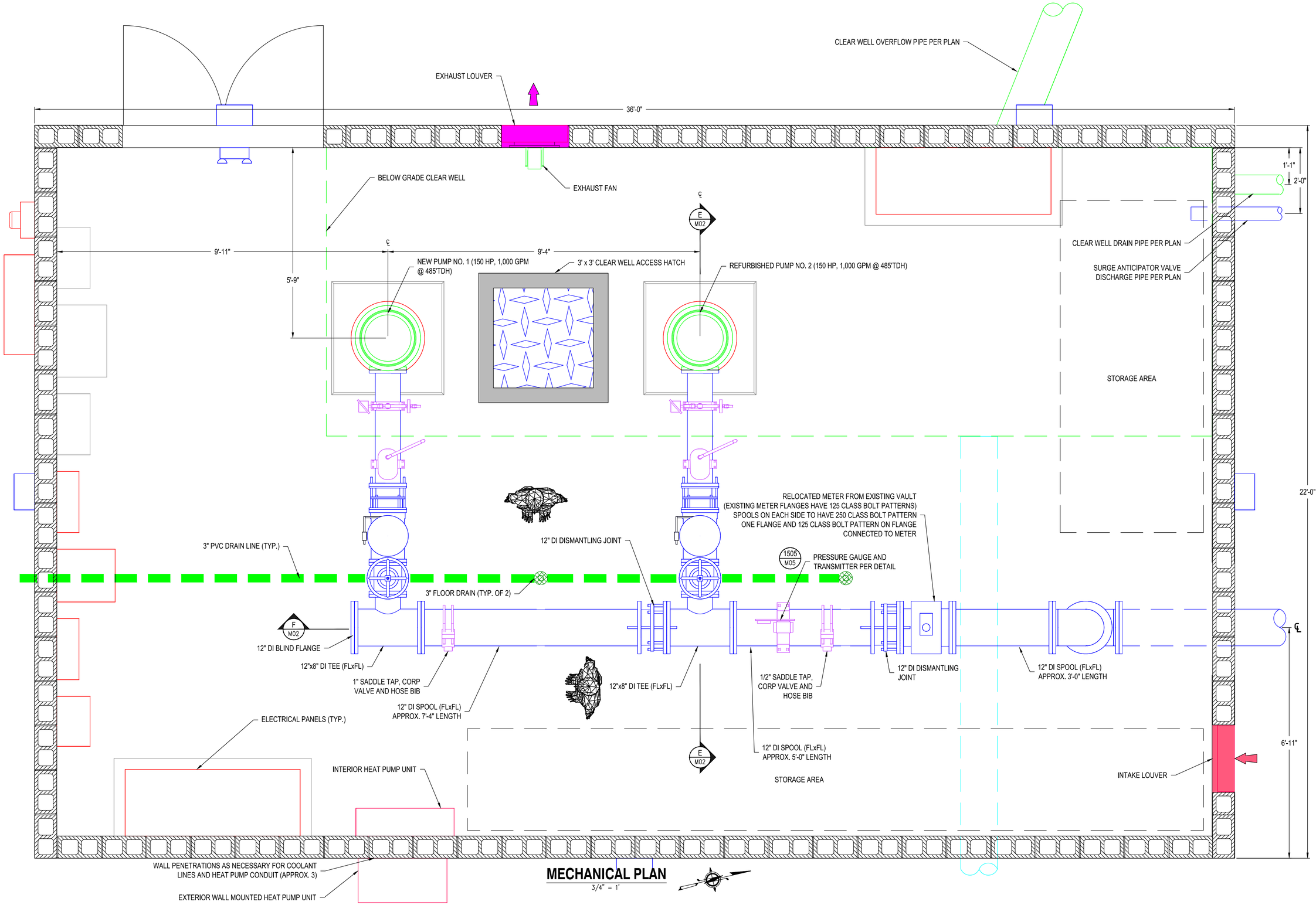

MECHANICAL PLAN

3/4" = 1'

RH2

GODFREY G. DILLARD — STATE OF WASHINGTON — 31196 — REGISTERED PROFESSIONAL ENGINEER

SIGNED: 12/8/2023

CLAYTON L. PERRY — STATE OF WASHINGTON — 53766 — REGISTERED PROFESSIONAL ENGINEER

SIGNED: 12/8/2023

CITY OF BONNEY LAKE

GRAINGER SPRINGS PUMP HOUSE REPLACEMENT

BONNEY Lake

MECHANICAL PLAN

ENGINEER: PJJ | REVIEWED: CLP | SAVE DATE: Oct 26, 2023 | PLOT DATE: Dec 11, 2023 | CLIENT: BON | FILENAME: GRS-D-M01.DWG | JOB NO.: 21-0231

REVISIONS

NO.	DATE	DESCRIPTION	BY	REVIEW

SCALE: SHOWN

0" 1' 2"

DRAWING IS FULL SCALE WHEN BAR MEASURES 2"

DWG NO.: M01

SHEET NO.: 20 / 50

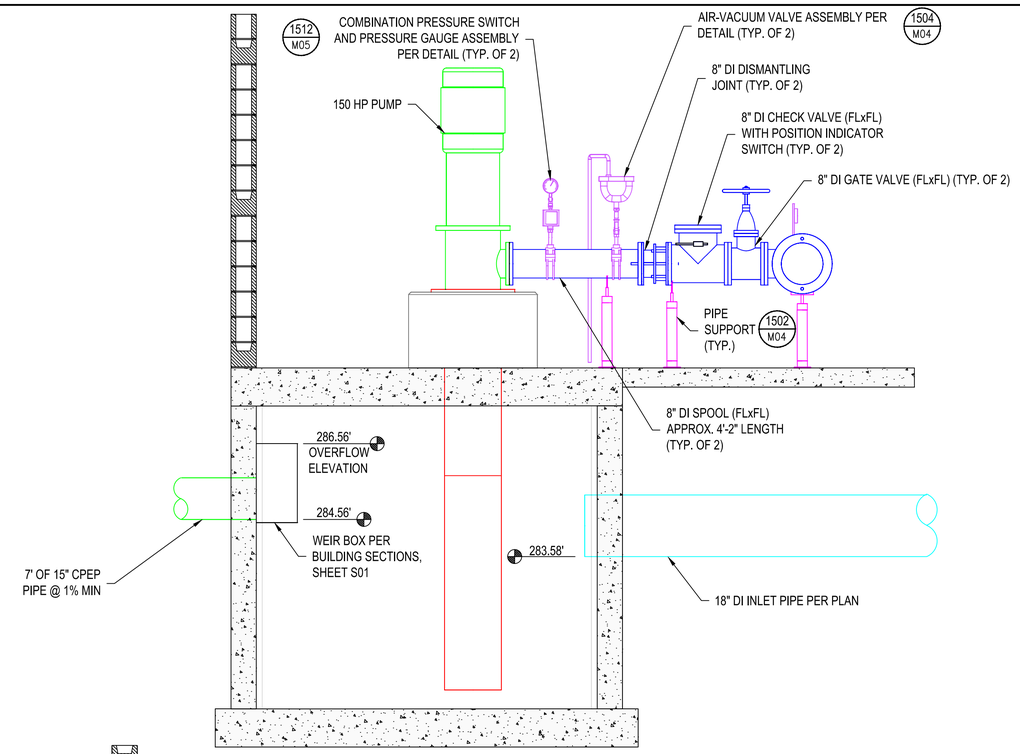

E M01 **MECHANICAL PROFILE**
1/2" = 1'

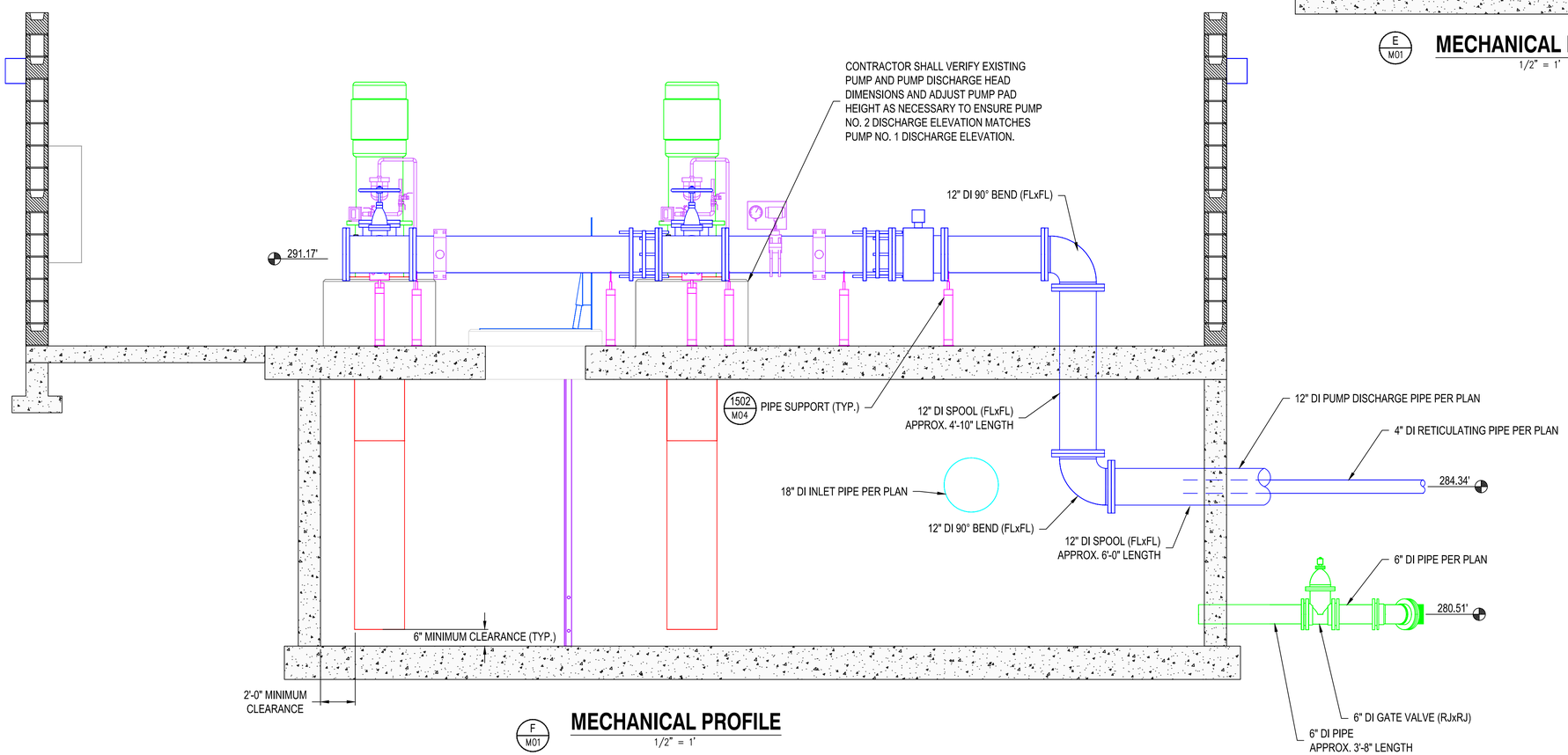

F M01 **MECHANICAL PROFILE**
1/2" = 1'

RH2

GODFREY G. DILLARD — STATE OF WASHINGTON — 31196 — REGISTERED PROFESSIONAL ENGINEER
SIGNED: 12/8/2023

CLAYTON L. PERRY — STATE OF WASHINGTON — 53766 — REGISTERED PROFESSIONAL ENGINEER
SIGNED: 12/8/2023

CITY OF BONNEY LAKE
GRAINGER SPRINGS PUMP HOUSE REPLACEMENT

BONNEY Lake

MECHANICAL PROFILES

JOB NO: 21-0291

CLIENT: BON
FILENAME: GRS-D-M01.DWG

ENGINEER: PJJ
REVIEWED: CLP
SAVE DATE: Oct 26, 2023
PLOT DATE: Dec 11, 2023

REVISIONS

NO.	DATE	DESCRIPTION	BY	REVIEW

SCALE: SHOWN
0" 1" 2"
DRAWING IS FULL SCALE WHEN BAR MEASURES 2"

DWG NO.: M02
SHEET NO.: 21 / 50

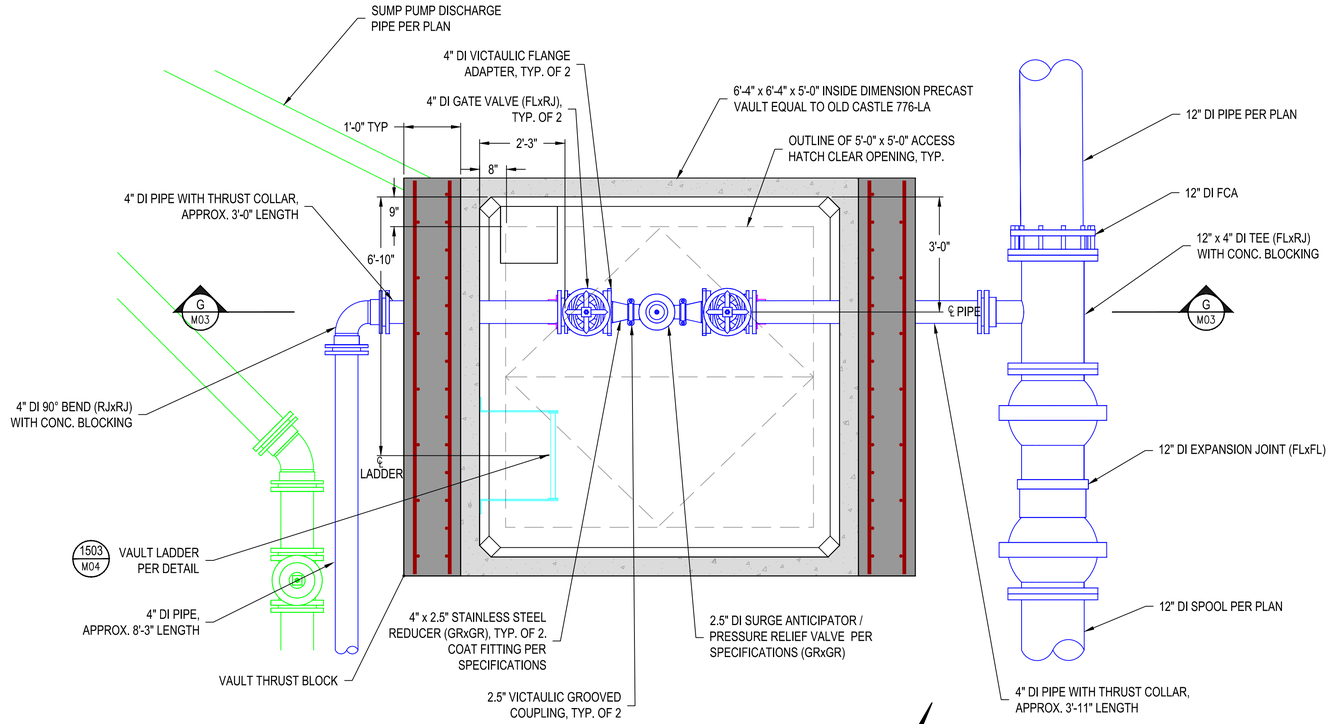

1510 C07

SURGE ANTICIPATOR VALVE VAULT PLAN

¾" = 1'-0"

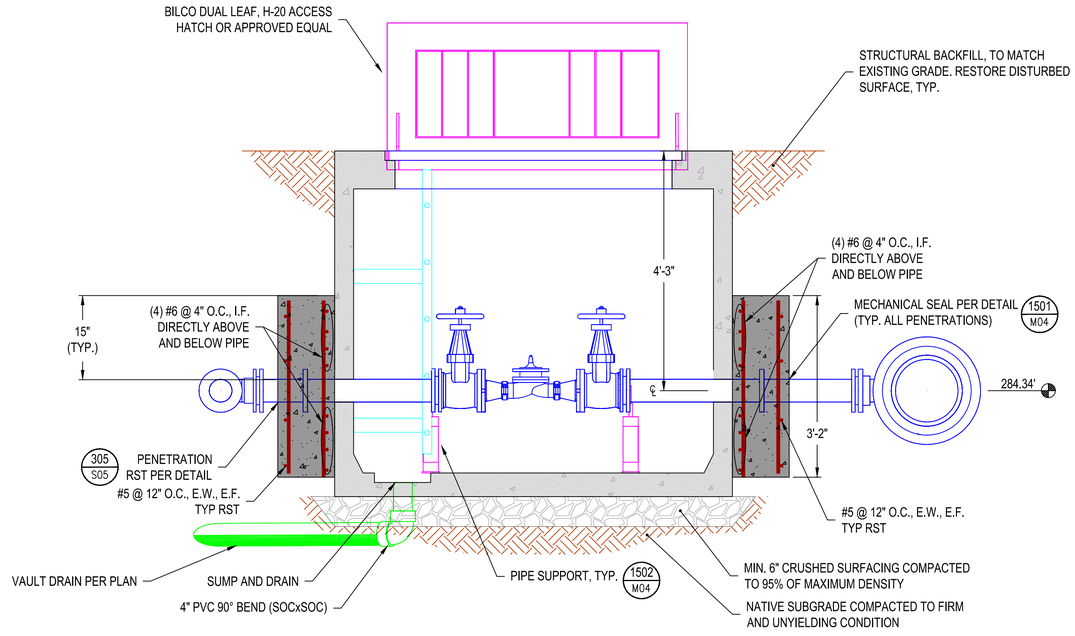

G M03

SURGE ANTICIPATOR VALVE VAULT SECTION

¾" = 1'-0"

RH2

GODFREY G. DILLARD, STATE OF WASHINGTON, 31196, REGISTERED PROFESSIONAL ENGINEER

SIGNED: 12/8/2023

CLAYTON L. PERRY, STATE OF WASHINGTON, 53766, REGISTERED PROFESSIONAL ENGINEER

SIGNED: 12/8/2023

CITY OF BONNEY LAKE
GRAINGER SPRINGS
PUMP HOUSE REPLACEMENT

BONNEY Lake

VAULT PLAN AND PROFILE

ENGINEER: PJJ
REVIEWED: CLP
SAVE DATE: Oct 26, 2023
PLOT DATE: Dec 11, 2023
CLIENT: BON
FILENAME: GRS-D-M01.DWG
JOB NO.: 21-0291

REVISIONS

NO.	DATE	DESCRIPTION	BY	REVIEW

SCALE: SHOWN

0" 1" 2"

DRAWING IS FULL SCALE WHEN BAR MEASURES 2"

DWG NO.: M03

SHEET NO.: 22 / 50

1500 TYP GENERAL MECHANICAL NOTES

1. CONTRACTOR SHALL PROVIDE ALL NECESSARY EQUIPMENT, MATERIALS, LABOR, AND EXPERTISE TO CONSTRUCT MAJOR AND MINOR PIPING SYSTEMS ACCORDING TO APPLICABLE CODES, STANDARDS, AND MANUFACTURER'S RECOMMENDATIONS.
2. CONTRACTOR SHALL CONFORM TO PIPE ROUTING AND ARRANGEMENT AS CLOSELY AS POSSIBLE. CONTRACTOR SHALL BE RESPONSIBLE FOR VERIFYING ALL PIPING DIMENSIONS. CONTRACTOR SHALL PREPARE AND SUBMIT DETAILED DIMENSIONAL DRAWINGS BASED ON APPROVED EQUIPMENT AND PIPING SYSTEMS.
3. FITTINGS AND/OR PIPING THAT MAY BE REQUIRED IN ORDER TO OPERATE SOME MINOR MECHANICAL SYSTEMS, INSTRUMENTATION, AND EQUIPMENT MAY NOT BE SHOWN IN THE PLANS. THE CONTRACTOR SHALL PROVIDE FITTINGS AND PIPING AS NECESSARY TO HAVE A COMPLETE AND FUNCTIONAL SYSTEM.
4. CONTRACTOR SHALL CONNECT EQUIPMENT, VALVES, METERS, AND OTHER SIMILAR FITTINGS TO PIPING SYSTEM SUCH THAT IT CAN BE READILY DISASSEMBLED FOR MAINTENANCE OF THE EQUIPMENT. THIS MAY REQUIRE PROVIDING ADDITIONAL FITTINGS OR SUPPORTS NOT SHOWN IN THE PLANS.
5. NOT ALL PIPE SUPPORTS ARE SHOWN IN THE PLANS. CONTRACTOR SHALL PROVIDE AND INSTALL PIPE SUPPORTS AS NECESSARY TO PROVIDE A RIGID, SECURE, NON-SAGGING SYSTEM. SEE SPECIFICATIONS FOR ADDITIONAL INFORMATION. NO SUPPORTS SHALL HAVE METAL PIECES IN CONTACT WITH PROCESS PIPING.
6. FITTING TAPS SHALL BE DONE AT THE FACTORY. PIPE TAPS MAY BE DONE ON SITE USING A TAPPING MACHINE BY AN EXPERIENCED OPERATOR. ALL TAPS ARE SUBJECT TO OWNER APPROVAL AND ANY REJECTED MATERIALS SHALL BE REPLACED AT THE CONTRACTOR'S EXPENSE. TAPPED DI PIPE SHALL BE CLASS 53 MINIMUM. DIRECT TAPS ON PIPE ARE TO BE LOCATED SUCH THAT ADJACENT FITTING BOLTS DO NOT INTERFERE WITH INSTALLATION OF GAUGES, SWITCHES OR AIR VALVES. TAPPED PIPE WILL BE REJECTED IF EQUIPMENT CANNOT BE INSTALLED CLEANLY AND DISASSEMBLED EASILY.
7. MINOR MECHANICAL PIPING: ALL VALVES 2" AND LARGER SHALL INCLUDE HANDWHEEL OPERATORS. ALL BALL VALVES SMALLER THAN 2" SHALL HAVE 1/4 TURN FULL HANDLES AND BE RATED FOR SPECIFIED WORKING PRESSURE.
8. CONTRACTOR SHALL PROVIDE ALL NECESSARY THRUST RESTRAINT, INCLUDING BUT NOT LIMITED TO CONCRETE BLOCKING AND DISMANTLING JOINTS. CITY APPROVED THRUST RESTRAINTS SHALL BE REQUIRED FOR ALL MJ FITTINGS.
9. IN THE EVENT THAT A SECTION OF PIPING FAILS A PRESSURE TEST, AND ANY MECHANICAL JOINTS WITH MEGA-LUG STYLE RESTRAINTS NEED TO BE DISASSEMBLED, THE MEGA-LUGS AND THE ASSOCIATED PIPE MAY NOT BE REUSED AND MUST BE REPLACED AT THE CONTRACTOR'S EXPENSE.
10. DISMANTLING JOINTS (DJ) AND COUPLINGS SHALL BE EQUAL TO ROMAC.
11. CONTRACTOR SHALL PROVIDE INSULATING FLANGE KITS OR A TRANSITION COUPLING BETWEEN ALL DISSIMILAR PIPING MATERIALS.
12. ALL PVC FITTINGS SHALL BE SOCKET END-TYPE FITTINGS UNLESS OTHERWISE NOTED.
13. ALL VALVES SHALL BE REMOVABLE WITHOUT HAVING TO CUT PIPE (I.E. FLANGED OR TRUE UNION)
14. CONTRACTOR SHALL INSTALL AND MOUNT ALL EQUIPMENT PER MANUFACTURER'S RECOMMENDATIONS, THE REQUIREMENTS IN THE SPECIFICATIONS FOR SEISMIC RESTRAINT, AND THE FOLLOWING REQUIREMENTS. EQUIPMENT MOUNTED ON FLOORS THAT SLOPE SHALL BE LEVELED WITH STEEL SHIMS AND SHALL BE FINISHED GROUTED TO FILL ALL VOIDS CAUSED BY THE FLOOR SLOPE.
15. ALL SOCKET STYLE PVC PIPE AND FITTINGS TO BE SOLVENT WELD. INSTALLATION SHALL FOLLOW MANUFACTURER'S RECOMMENDATIONS AND SHALL INCLUDE PRIMER AND SOLVENT CEMENT EQUAL TO IPS WELD-ON P-70 AND 724 RESPECTIVELY.
16. CONTRACTOR SHALL PROVIDE FITTINGS NECESSARY TO TRANSITION BETWEEN DIFFERENT PIPE MATERIALS AND SIZES.
17. THE CONTRACTOR SHALL PROVIDE ALL FITTINGS NECESSARY TO TRANSITION AND CONNECT EQUIPMENT AND PIPE, AND SHALL ROUTE PIPE IN A NEAT MANNER SUCH THAT THEY ARE PARALLEL AND PERPENDICULAR TO THE WALLS, FLOOR, AND CEILING.

GENERAL PIPE SUPPORT NOTES

TABLE A: PIPE SUPPORT DESIGN CRITERIA

PIPE SIZE	DESIGN WEIGHT (LBS)	VERTICAL ROD SIZE	MAX. SPAN FOR PIPE SUPPORTS (FT)			
			STEEL	DUCTILE IRON	COPPER	PLASTIC
1"	30	3/8"	7	10	5	5
1-1/2"	50	3/8"	9	10	7	5
2"	70	3/8"	10	10	8	6
2-1/2"	100	1/2"	10	10	9	6
3"	140	1/2"	10	10	10	7
4"	200	5/8"	10	10	10	7
6"	400	3/4"	10	10	10	8
8"	700	3/4"	10	10	10	8
10"	1000	7/8"	10	10	10	10
12"	1400	7/8"	10	10	10	10
14"	1600	1"	10	10	-	10
16"	2100	1"	10	10	-	10
18"	2600	1-1/4"	10	10	-	10
20"	3200	1-1/4"	10	10	-	10
24"	4600	1-1/2"	10	10	-	10
30"	5400	1-1/2"	10	10	-	10
36"	8200	2"	10	10	-	10

1. FOR PIPE SIZES THAT ARE NOT LISTED IN ABOVE TABLE, THE NEXT LARGER PIPE SIZE SHALL BE USED FOR DETERMINING LOADING AND SUPPORT SPACING.

2. ROD SIZE IS BASED ON CARRYING SINGLE PIPE. WHEN MORE THAN ONE IS TO BE SUPPORTED, RODS SHALL BE SIZED USING SUM OF DESIGN WEIGHTS TO DETERMINE TOTAL LOAD.

3. PLASTIC PIPE SUPPORT SPACING BASED ON SCH 80 PIPE AT 100 DEG F. SCH 40 PIPE OR HIGHER TEMPERATURES REQUIRE SHORTER SPANS. SEE MANUFACTURER'S RECOMMENDATIONS.

4. INSTALL AT LEAST ONE HANGER PER PIPE LENGTH. LOCATE AS NEAR THE END CONNECTION AS POSSIBLE.

5. PROVIDE TURNBUCKLE WITH SUPPORT ROD FOR PIPES SUBJECT TO HORIZONTAL MOVEMENT.

6. PROVIDE LATERAL AND SEISMIC BRACING AS SPECIFIED.

7. DESIGN WEIGHTS ARE BASED ON SCH 80 STEEL PIPE AT 10 FT SUPPORT SPACING.

8. ALL CONNECTIONS TO CONCRETE SHALL BE CONCRETE ANCHORS, SEE SPECIFICATIONS AND DETAIL 302

PIPE SUPPORT NOTES:

1. ALL STRUCTURAL AND PIPE ATTACHMENT, PIPE SUPPORT RACKS AND TRAPEZE HANGER COMPONENTS SHALL BE HOT DIPPED GALVANIZED FOR ABOVE GRADE SERVICE, AND STAINLESS STEEL FOR SUBMERGED SERVICE.

1. CONTRACTOR SHALL PROVIDE ALL NECESSARY EQUIPMENT, MATERIALS, AND LABOR FOR CONSTRUCTING PIPE SUPPORT SYSTEMS.

3. PIPE SUPPORT SYSTEMS AS DETAILED PROVIDE GENERAL GUIDELINES FOR HOW PIPES SHALL BE SUPPORTED. ADDITIONAL SUPPORT CONFIGURATIONS MAY BE REQUIRED. CONTRACTOR SHALL SUBMIT ALTERNATE SUPPORT DETAILS FOR APPROVAL.

4. CONTRACTOR SHALL PROVIDE SUPPORTS AS NEEDED TO SECURE PIPING SYSTEM IN NORMAL AND TEST OPERATING CONDITIONS.

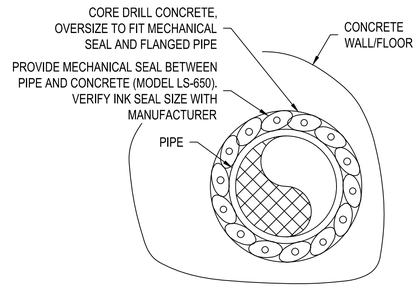

ABOVE GRADE AND BELOW GRADE (NON-SUBMERGED) CONCRETE WALL AND FLOOR

1) ALL PENETRATIONS SHALL BE SEALED TO MAINTAIN FIRE AND SOUND RATING OF INTERIOR.

2) ALL BELOW GRADE AND/OR SUBMERGED PENETRATIONS SHALL BE SEALED WATERTIGHT.

3) MECHANICAL SEALS SHALL BE LINKSEAL OR APPROVED EQUAL. MECHANICAL SEALS SHALL BE SELECTED BASED ON THE APPLICATION.

4) WHERE PIPE PENETRATION IS LOCATED IN THE FLOOR OVER A POTABLE WATER BEARING STRUCTURE, SLEEVE SHALL EXTEND 1" MIN. ABOVE FLOOR TO FURTHER PREVENT WATER INTRUSION.

1501 MXX **MECHANICAL SEAL PIPE PENETRATION**
NTS

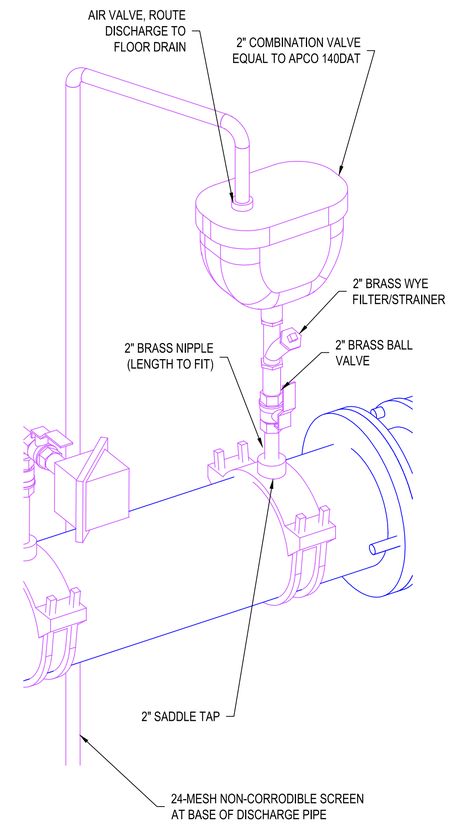

1504 M02 **AIR VACUUM VALVE ASSEMBLY**
NTS

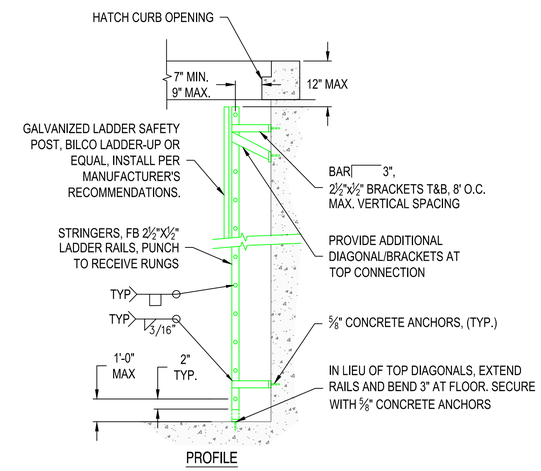

1503 M03 **VAULT LADDER DETAIL**
NOT TO SCALE

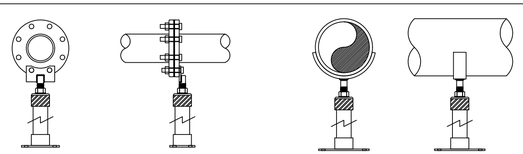

TYPE A - FLANGE SUPPORT **TYPE B - SADDLE SUPPORT**

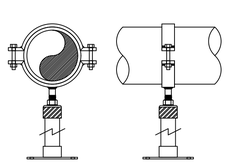

TYPE C - SADDLE CLAMP SUPPORT

1) FLANGE, SADDLE, AND SADDLE CLAMP SUPPORTS SHALL BE "STANDON" BRAND AS MANUFACTURED BY MATERIAL RESOURCES OR EQUAL.

2) IF SUPPORT IS SUBMERGED OR LOCATED WITHIN A WATER BEARING STRUCTURE, ALL HARDWARE AND SUPPORT MATERIAL SHALL BE STAINLESS STEEL. IN ALL OTHER AREAS, MATERIALS SHALL BE HOT-DIP GALVANIZED UNLESS NOTED OTHERWISE.

1502 MXX **PIPE SUPPORT DETAIL**
NOT TO SCALE

DRAIN PLUMBING NOTES:

1) THE DRAIN PIPING SYSTEM AS SHOWN IN DWG NO. M01 IS DIAGRAMMATIC AND DOES NOT SHOW ALL DETAIL OR OFFSETS. IT SHALL BE THE CONTRACTOR'S RESPONSIBILITY TO CORRECTLY LOCATE AND INSTALL THIS DRAIN PIPING SYSTEM.

2) ALL PIPING SHALL BE INSTALLED IN ACCORDANCE WITH THE UNIFORM PLUMBING CODE, LATEST EDITION, AND ALL OTHER APPLICABLE CODES AND STANDARDS.

3) ALL DRAIN PIPING TO BE SLOPED AT ¼"/FT MIN. UNLESS OTHERWISE NOTED. ALL ELEVATIONS AND SLOPES TO BE FIELD VERIFIED BEFORE INSTALLATION.

5) ALL DRAIN SHALL BE PVC, UNLESS OTHERWISE NOTED.

6) PROVIDE COPPER P-TRAP PRIMER WATER SUPPLY PER PLUMBING CODE.

4" PVC PIPE, UNLESS OTHERWISE NOTED

4" FLOOR DRAIN WITH 6" ADJUSTABLE STRAINER (ZURN Z415B OR EQUAL)

RH2

GODFREY G. DILLARD, STATE OF WASHINGTON, 31196, REGISTERED PROFESSIONAL ENGINEER
SIGNED: 12/8/2023

CLAYTON L. PARSLEY, STATE OF WASHINGTON, 53766, REGISTERED PROFESSIONAL ENGINEER
SIGNED: 12/8/2023

CITY OF BONNEY LAKE
GRAINGER SPRINGS PUMP HOUSE REPLACEMENT
BONNEY Lake

MECHANICAL DETAILS 1

JOB NO: 21-0231
CLIENT: BON
FILENAME: GRS-D-MDET.DWG
SAVE DATE: Oct 26, 2023
PLOT DATE: Dec 11, 2023
ENGINEER: PJJ
REVIEWED: CLP

REVISIONS

NO.	DATE	DESCRIPTION	BY	REVIEW

SCALE: SHOWN
0" 1" 2"
DRAWING IS FULL SCALE WHEN BAR MEASURES 2"

DWG NO.: M04
SHEET NO.: 23 / 50

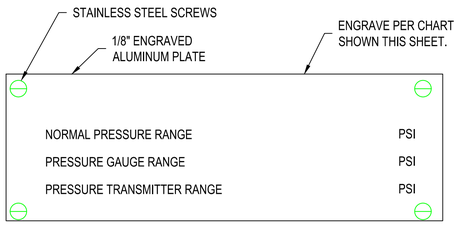

IDENTIFICATION AND CALIBRATION PLATE DETAIL

LEGEND

1. 1/4" POLYETHYLENE TUBING WITH COMPRESSION RING ENDS. COIL EACH SECTION FOR VIBRATION ISOLATION.
2. 1/2" x 1/4" BRASS TEE (S X S)
3. 1/2" BRASS TUBING (S X S) - USE SHORT NIPPLES ON VERTICAL PIPING
4. 1/2" BRASS GAUGE COCK (S X S) EQUAL TO I.E. 242-B-4A.
5. 1/2" PULSATION DAMPENER AND GAUGE SNUBBER EQUAL TO "MIDWEST" MODEL 200.

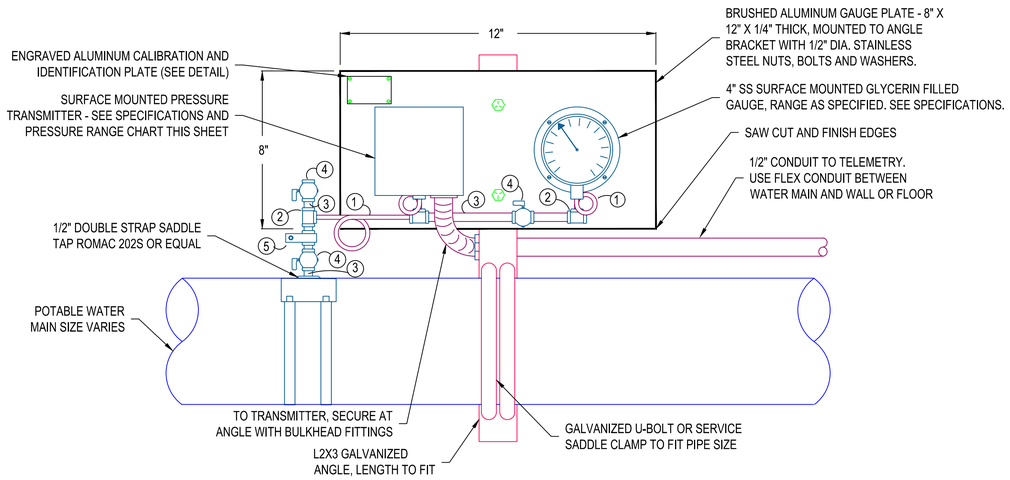

1505 TYP

GAUGE AND PRESSURE TRANSMITTER ASSEMBLY

NOT TO SCALE

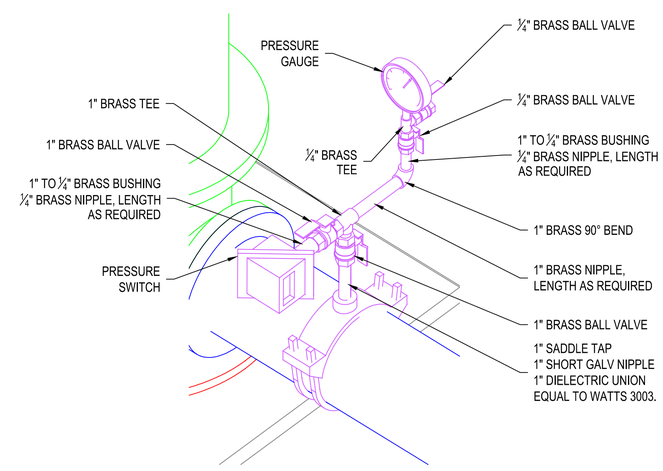

1512 M02

PRESSURE GAUGE AND SWITCH ASSEMBLY

NTS

RH2

GODFREY G. DILLARD — STATE OF WASHINGTON — 31196 — REGISTERED PROFESSIONAL ENGINEER

SIGNED: 12/8/2023

CLAYTON L. PASLEY — STATE OF WASHINGTON — 53766 — REGISTERED PROFESSIONAL ENGINEER

SIGNED: 12/8/2023

CITY OF BONNEY LAKE
GRAINGER SPRINGS
PUMP HOUSE REPLACEMENT

BONNEY Lake

MECHANICAL DETAILS 2

ENGINEER: PJJ
REVIEWED: CLP
DATE: Oct 26, 2023
PLOT DATE: Dec 11, 2023
CLIENT: BON
FILENAME: GRS-D-MDET.DWG
JOB NO.: 21-0291

REVISIONS

NO.	DATE	DESCRIPTION	BY	REVIEW

SCALE: SHOWN

0" 1" 2"

DRAWING IS FULL SCALE WHEN BAR MEASURES 2"

DWG NO.: M05

SHEET NO.: 24 / 50

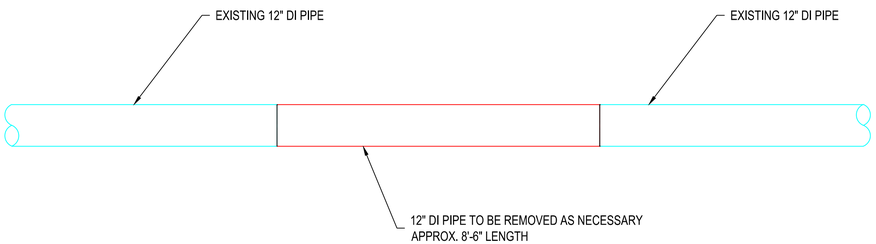

EXISTING CONFIGURATION

½" = 1'-0"

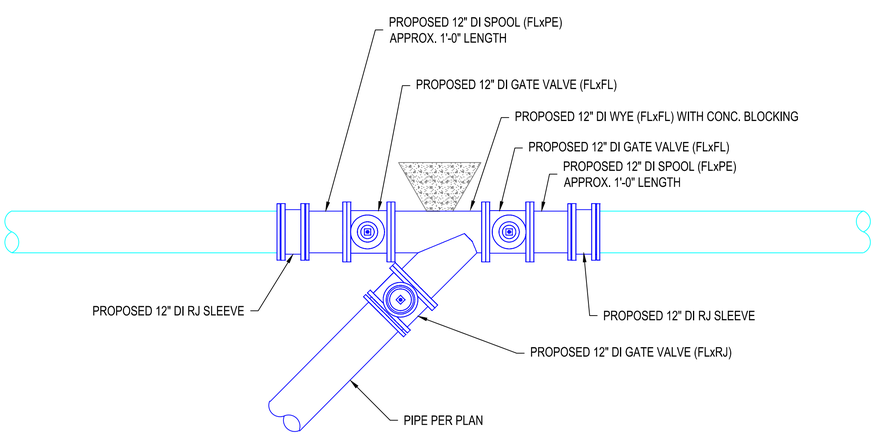

FINAL CONFIGURATION

½" = 1'-0"

1506
C08

CONNECTION TO EXISTING PUMP DISCHARGE

RH2

GODFREY G. DILLARD
STATE OF WASHINGTON
31196
REGISTERED PROFESSIONAL ENGINEER

SIGNED: 12/8/2023

CLAYTON L. PASSEY
STATE OF WASHINGTON
53766
REGISTERED PROFESSIONAL ENGINEER

SIGNED: 12/8/2023

CITY OF BONNEY LAKE
GRAINGER SPRINGS
PUMP HOUSE REPLACEMENT

BONNEY Lake

CONNECTION DETAILS

JOB NO.: 214231
CLIENT: BON
FILENAME: GRS-D-MDET.DWG
SAVE DATE: Oct 26, 2023
PLOT DATE: Dec 11, 2023
ENGINEER: PJJ
REVIEWED: CLP

REVISIONS

NO.	DATE	DESCRIPTION	BY	REVIEW

SCALE: SHOWN

0" 1" 2"

DRAWING IS FULL SCALE WHEN BAR MEASURES 2"

DWG NO.: M06

SHEET NO.: 25 / 50

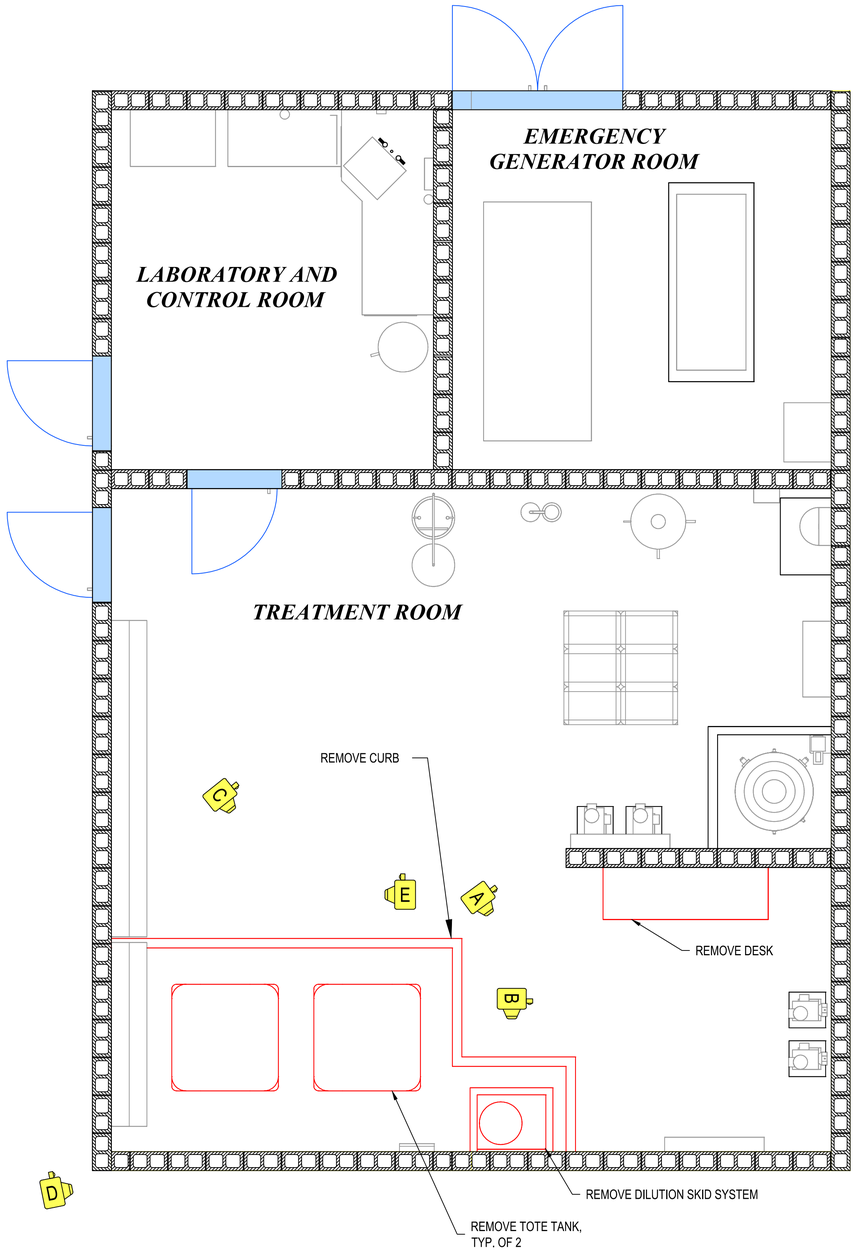

EXISTING TREATMENT BUILDING AND DEMOLITION PLAN

⅜" = 1'-0"

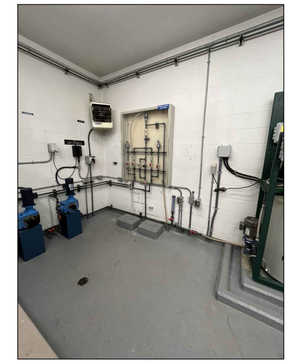

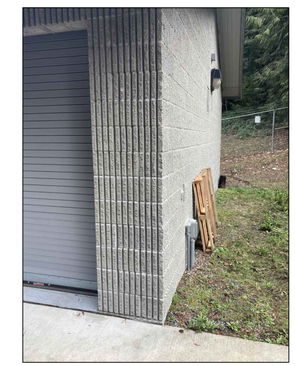

EXISTING TREATMENT BUILDING PHOTOS

NOTE:
LOCATION OF TREATMENT BUILDING SHOWN ON SHEET C01

RH2

GODFREY G. DILLARD, STATE OF WASHINGTON, 31196, REGISTERED PROFESSIONAL ENGINEER
SIGNED: 12/8/2023

RANDY M. SIMPSON, STATE OF WASHINGTON, 46525, REGISTERED PROFESSIONAL ENGINEER
SIGNED: 12/8/2023

CITY OF BONNEY LAKE
GRAINGER SPRINGS
PUMP HOUSE REPLACEMENT

EXISTING TREATMENT BUILDING AND DEMOLITION PLAN (BID ADD)

ENGINEER: PJJ | SAVE DATE: Oct 17, 2023 | CLIENT: BON | JOB NO.: 21-0231
REVIEWED: BMS | PLOT DATE: Dec 11, 2023 | FILENAME: GRS-D-M02.DWG

REVISIONS

NO.	DATE	DESCRIPTION	BY	REVIEW

SCALE: SHOWN
0" 1" 2"
DRAWING IS FULL SCALE WHEN BAR MEASURES 2"

DWG NO.: M07
SHEET NO.: 26 / 50

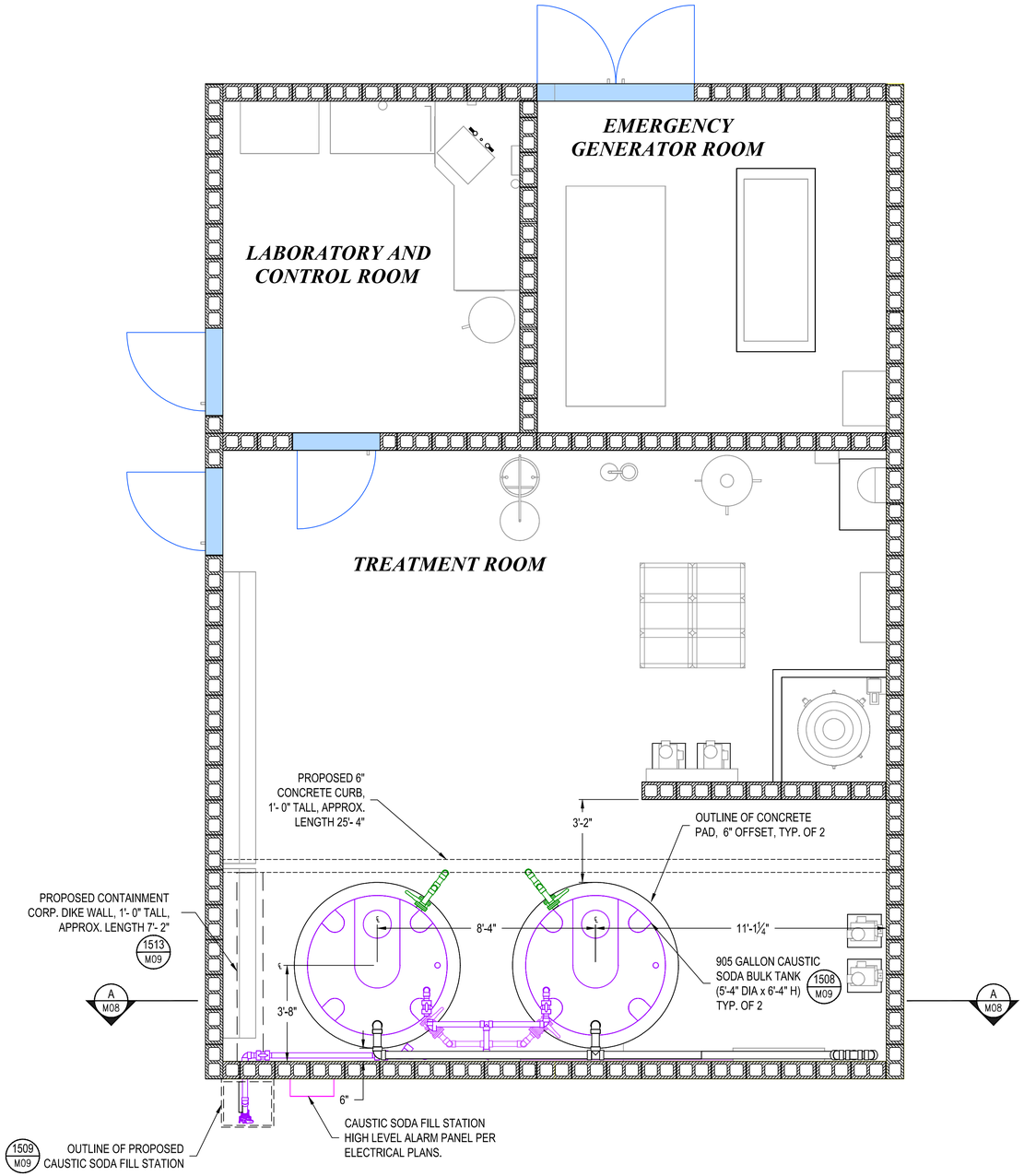

PROPOSED TREATMENT BUILDING IMPROVEMENTS

⅜" = 1'–0"

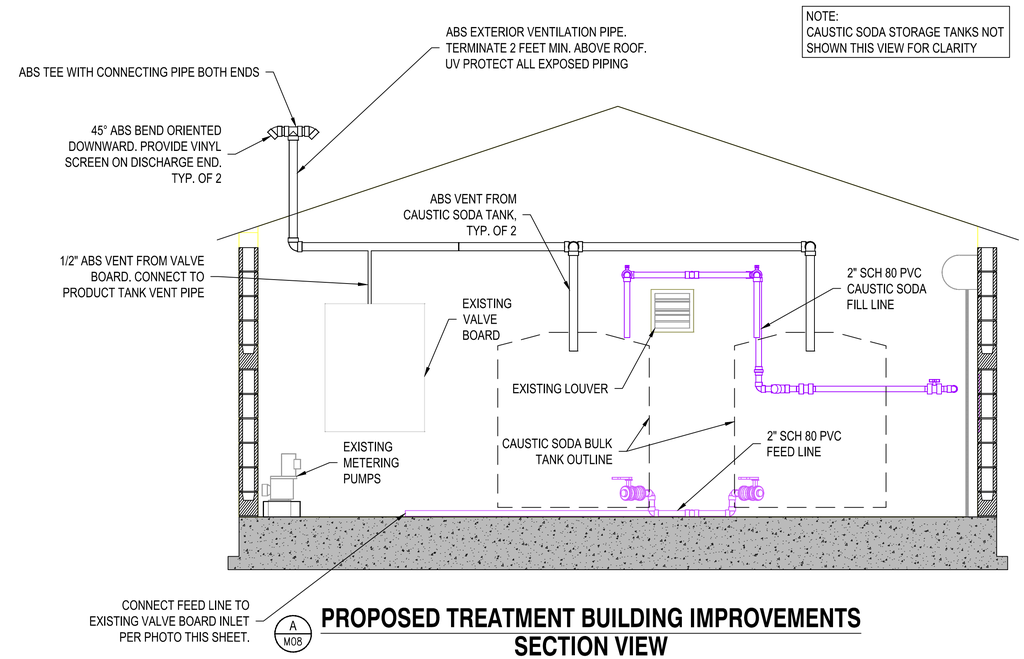

PROPOSED TREATMENT BUILDING IMPROVEMENTS SECTION VIEW

⅜" = 1'–0"

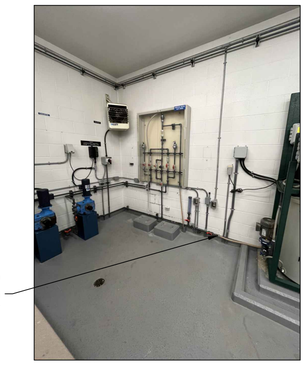

FEED LINE CONNECTION

NTS

RH2

GODFREY G. DILLARD, STATE OF WASHINGTON, 31196, REGISTERED PROFESSIONAL ENGINEER

SIGNED: 12/8/2023

PATRICK M. SHANAGAN, STATE OF WASHINGTON, 46525, REGISTERED PROFESSIONAL ENGINEER

SIGNED: 12/8/2023

CITY OF BONNEY LAKE
GRAINGER SPRINGS
PUMP HOUSE REPLACEMENT

BONNEY Lake

TREATMENT BUILDING IMPROVEMENTS
(BID ADD)

ENGINEER: PJJ
REVIEWED: BMS
SAVE DATE: Oct 17, 2023
PLOT DATE: Dec 11, 2023
CLIENT: BON
FILENAME: GRS-D-M02.DWG
JOB NO: 21-0231

REVISIONS

NO.	DATE	DESCRIPTION	BY	REVIEW

SCALE: SHOWN

0" 1" 2"

DRAWING IS FULL SCALE WHEN BAR MEASURES 2"

DWG NO.: M08

SHEET NO.: 27 / 50

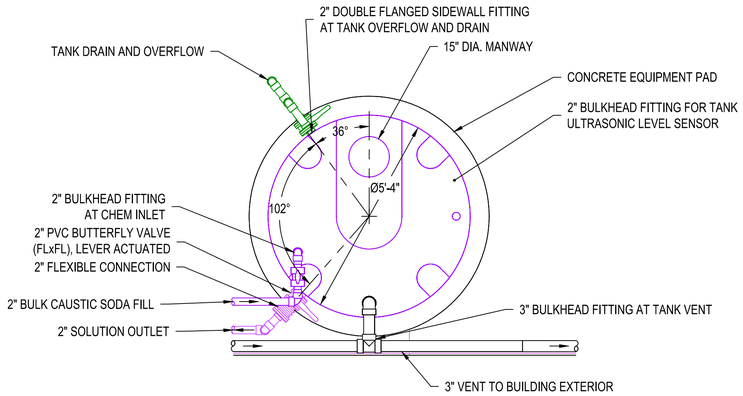

1508 M08

CAUSTIC SODA BULK TANK DETAIL

½" = 1'-0"

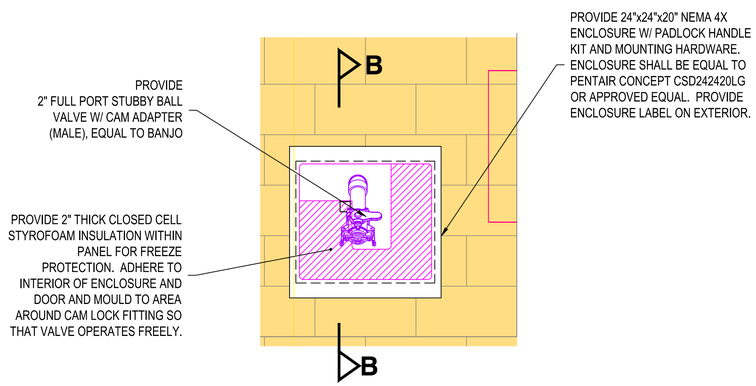

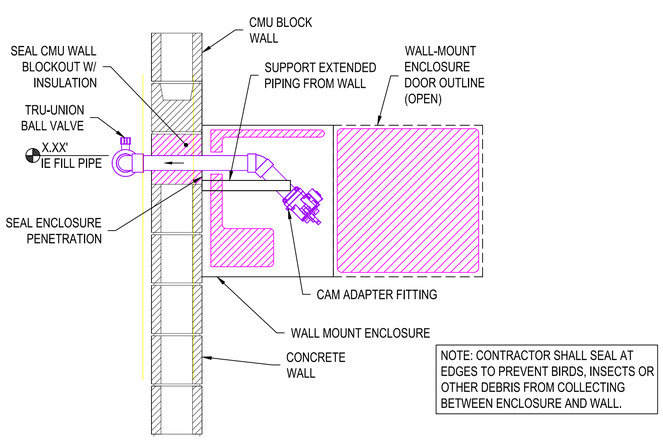

NOTE: CONTRACTOR SHALL SEAL AT EDGES TO PREVENT BIRDS, INSECTS OR OTHER DEBRIS FROM COLLECTING BETWEEN ENCLOSURE AND WALL.

SECTION B-B

1509 M08

BULK CAUSTIC SODA FILL STATION

1" = 1'-0"

DIKE WALL NOTES:

- SEAL WALL STRUT, CORNER, AND WALL PLATE TO CONCRETE DECK WITH CAULKING COMPATIBLE WITH 50% CAUSTIC SODA.
- FASTEN WITH ⅜" DIA. BY 3⅝" LONG HILTI BRAND FASTENERS. RECOMMENDED LINEAR DISTANCE BETWEEN FASTENERS IS 9" STAGGERED BETWEEN INSIDE AND OUTSIDE FLANGE

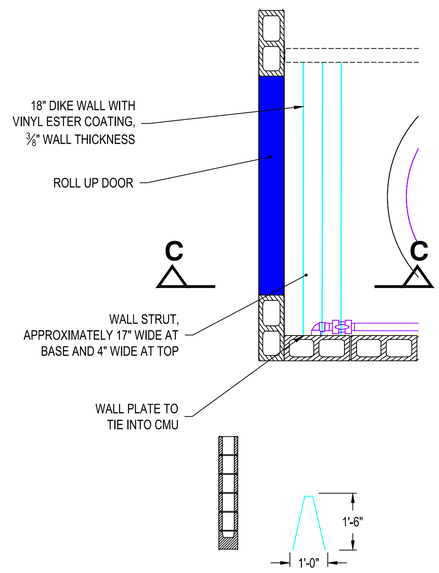

SECTION C-C

1513 M08

CONTAINMENT CORP DIKE WALL DETAIL

NTS

RH2

GODFREY G. DILLARD — STATE OF WASHINGTON — 31196 — REGISTERED PROFESSIONAL ENGINEER

SIGNED: 12/8/2023

RANDEY M. SANTIAGO — STATE OF WASHINGTON — 46525 — REGISTERED PROFESSIONAL ENGINEER

SIGNED: 12/8/2023

CITY OF BONNEY LAKE
GRAINGER SPRINGS
PUMP HOUSE REPLACEMENT

BONNEY Lake

TREATMENT BUILDING DETAILS (BID ADD)

ENGINEER: PJJ | REVIEWED: BMS | DATE: Oct 17, 2023 | PLOT DATE: Dec 11, 2023 | CLIENT: BON | FILENAME: GRS-D-M02.DWG | JOB NO.: 21-0231

REVISIONS

NO.	DATE	DESCRIPTION	BY	REVIEW

SCALE: SHOWN

0" 1" 2"

DRAWING IS FULL SCALE WHEN BAR MEASURES 2"

DWG NO.: M09 | SHEET NO.: 28 / 50

ONE-LINE DIAGRAM SYMBOLS

- CIRCUIT BREAKER
  - XXX/YY – CB SIZE & NO. OF POLES
  - ET – ELECTRONIC TRIP
  - TM – THERMAL MAGNETIC BREAKER
  - MCP – MOTOR CIRCUIT PROTECTOR
  - SE – SERVICE ENTRANCE
  - GFI – GROUND FAULT INTERRUPTER
- FUSE
- FUSED DISCONNECT SWITCH
- PLUG–IN CONNECTION
- RTM – RUN TIME METER
- OC – MOTOR OPERATION COUNTER
- SSRVS – SOLID STATE REDUCED VOLTAGE STARTER
- VARIABLE FREQUENCY DRIVE
- MOTOR STARTER
- MOTOR STARTER W/ OPERATOR DEVICES (A B / C D)
  - A – HAND–OFF–AUTO
  - B – OPERATIONAL COUNTER
  - C – RUN TIME METER
  - D – RUN LIGHT
  - E – FAIL LIGHT
  - F – EMERGENCY STOP
- K – KIRK KEY INTERLOCK
- POWER TRANSFORMER
- CONTROL POWER TRANSFORMER
- TRANSFORMER
- CURRENT TRANSFORMER
- VOLTAGE TRANSFORMER
- CONTACTOR
- CAPACITOR
- ENGINE GENERATOR
- GENERATOR CONNECTION RECEPTACLE
- S/N – SOLID NEUTRAL
- TB – TERMINAL BLOCK
- SURGE PROTECTION DEVICE
- SPD – SURGE PROTECTION DEVICE (ALTERNATIVE)

GROUNDING SYSTEM SYMBOLS

- GROUND
- METAL PIPE GROUND
- CONNECTION POINT, EXOTHERMIC WELD. CADWELD OR APPROVED EQUAL.
- GROUND ROD SIZED PER N.E.C. USE EXOTHERMIC WELD CONNECTION AT THE GROUND ROD.
- PIGTAIL, BARE COPPER, LENGTH AS REQUIRED, 8' MINIMUM.
- CONNECTION POINT, MECHANICAL, COMPRESSION TYPE.

ELECTRICAL SITE PLAN SYMBOLS

- UTILITY POLE AND GUY WIRE
- HH – MANHOLE OR HANDHOLE
- P – BURIED POWER VAULT OR MANHOLE
- T – TELEPHONE VAULT OR PEDESTAL
- F – FIBER OPTICS VAULT OR PEDESTAL
- LUMINAIRE
- PAD–MOUNT TRANSFORMER

PANELBOARDS, SWITCHES, AND EQUIPMENT

- SERVICE ENTRANCE, SWITCHGEAR, MOTOR CONTROL CENTER, OR PANELBOARD
- SURFACE MOUNTED PANELBOARD
- FLUSHED MOUNTED PANELBOARD
- NXX – FIELD CONTROL STATION WITH NEMA REQUIREMENTS.
  - N1 – NEMA 1
  - N3R – NEMA 3R
  - N4 – NEMA 4
  - N4SS – NEMA 4 STAINLESS STEEL
  - N4F – NEMA 4 FIBERGLASS
  - N6 – NEMA 6
  - N12 – NEMA 12 GASKETED
- EQUIPMENT MOUNTING STAND
- T – HEATER, WATTAGE NOTED
- EQUIPMENT CONNECTION
- M – SINGLE PHASE MOTOR. HORSEPOWER AS NOTED
- HP – THREE PHASE MOTOR. HORSEPOWER AS NOTED
- HP – SINGLE PHASE MOTOR. HORSEPOWER AS NOTED
- ELECTRICAL PLUG
- DISCONNECT SWITCH
- F – FUSED DISCONNECT SWITCH
- COMBINATION MOTOR STARTER AND DISCONNECT SWITCH

RECEPTACLES AND JUNCTION BOX SYMBOLS

- J – CEILING JUNCTION BOX
- J – WALL JUNCTION BOX
- J – FLOOR JUNCTION BOX
- DUPLEX WALL RECEPTACLE , 120V
  - WP = WEATHERPROOF
  - G = GROUNDED
  - IG = ISOLATED GROUND
  - GFI = GROUND FAULT INTERRUPTER
- DOUBLE DUPLEX
- SINGLE RECEPTACLE, 120V
- SINGLE RECEPTACLE, 208V
- DUPLEX FLOOR RECEPTACLE, 120V
- SPECIAL PURPOSE WALL RECEPTACLE, RATING AS NOTED
- CLOCK
- TV – TELEVISION
- TELEPHONE
- TELEPHONE/DATA WITH CABLE
- TELEPHONE/DATA WITHOUT CABLE

SWITCH OUTLETS

- S – STANDARD SWITCH, 120VAC, 20 AMP
- $_3$ – 3–WAY SWITCH, 120VAC, 20 AMP
- $_{HOA}$ – 3–POSITION SWITCH, 120VAC, 20 AMP, LABEL SWITCH POSITION HAND–OFF–MOTION OR PHOTO

S_{DEE} SINGLE–POLE	S_P PILOT–LIGHTED
S_2 DOUBLE–POLE	S_K KEY–OPERATED
S_3 THREE WAY	S_{LV} LOW VOLTAGE
S_4 FOUR WAY	S_M MASTER
S_D DIMMER	PUSHBUTTON
S_{OS} OCCUPANCY SENSOR	

LIGHTING FIXTURES/DEVICES

- FLUORESCENT FIXTURE
- WALL/CEILING MOUNTED FIXTURE
- EMERGENCY LIGHT WITH SELF CONTAINED BATTERY
- SURFACE OR PENDANT MOUNTED FIXTURE
- RECESSED FIXTURE
- MD – MOTION DETECTOR
- PC – PHOTO CONTROL CELL

FIRE SYSTEM SYMBOLS

- H – HEAT DETECTOR
- S – SMOKE DETECTOR
- D – FIRE ALARM DISPATCH STROBE ALARM
- A – FIRE ALARM AUDIBLE/VISUAL ALARM
- F – FIRE ALARM MANUAL PULL STATION

ADDITIONAL SYMBOLS

- S – SOUND SYSTEM SPEAKER
- V – SOUND SYSTEM VOLUME CONTROL
- B – DOORBELL

VALVE SYMBOLS

- PILOT VALVE SOLENOID
- VALVE
- CHECK VALVE
- CONTROL VALVE

ABBREVIATIONS

- SPDT – SINGLE POLE, DOUBLE THROW
- SPST – SINGLE POLE, SINGLE THROW
- DPST – DOUBLE POLE, SINGLE THROW
- WP – WEATHER–PROOF
- GFI – GROUND FAULT INTERRUPT
- P – POWER
- C – CONTROL
- J – INSTRUMENTATION
- PC – POWER & CONTROL
- CJ – CONTROL & INSTRUMENTATION
- CKT. – CIRCUIT
- C.O. – CONDUIT ONLY
- N.L. – NIGHT LIGHT
- AL. – ALUMINUM
- CU. – COPPER

HOA	HAND–OFF–AUTO SWITCH
RTM	RUN TIME METER
OC	OPERATION COUNTER
MRIL	MOTOR RUN INDICATION LIGHT
SFIL	SEAL FAIL INDICATION LIGHT
SFTR	SEAL FAIL TRIP RESET
OTIL	OVER TEMPERATURE INDICATION LIGHT
MOIL	MOTOR OVERLOAD INDICATION LIGHT

INDICATE TYPE BY LETTER	INSTRUMENT METER	
V	A – AMMETER	VAR – VARMETER
AH	AH – AMPERE–HOUR	VARH – VARHOUR METER
	PF – POWER FACTOR	W – WATTMETER
	V – VOLTMETER	WH – WATTHOUR METER
	VA – VOLT AMMETER	

RACEWAY LEGEND

SITE PLAN LEGEND

- P – PROPOSED POWER
- TEL – PROPOSED TELEPHONE
- TELM – PROPOSED INSTRUMENTATION
- FO – PROPOSED FIBER OPTICS

BUILDING OR FACILITY PLAN LEGEND

- 480 VOLT EXPOSED RACEWAY
- 480 VOLT WIRING CONCEALED, UNDERGROUND, EMBEDDED, OR CONCRETE ENCASED RACEWAY
- 120/208/240 VOLT EXPOSED RACEWAY
- 120/208/240V WIRING CONCEALED, UNDERGROUND, EMBEDDED, OR CONCRETE ENCASED RACEWAY
- CONTROL OR INSTRUMENTATION EXPOSED RACEWAY
- CONTROL OR INSTRUMENTATION, UNDERGROUND, EMBEDDED, OR CONCRETE ENCASED RACEWAY
- HOME RUN TO PANELBOARD OR AS INDICATED
- CONDUIT RUN, BROKEN AND CONTINUED SAME SHEET OR AS NOTED
- FLEXIBLE CONDUIT
- CONDUIT RUN. HATCH MARKS INDICATE NUMBER OF CONDUCTORS
- ½" GRC, 2–#12 – CALLOUT INDICATING CONDUIT SIZE, NUMBER AND SIZE OF WIRE.
- XXX – CALLOUT INDICATING CONDUIT PER SCHEDULE
- CONDUIT BENT UP OR TOWARD
- CONDUIT BENT DOWN OR AWAY
- CAPPED CONDUIT

ONE-LINE DIAGRAM INFORMATION

- EXISTING EQUIPMENT AND CONDUIT
- PROPOSED EQUIPMENT AND CONDUIT
- GROUNDING EQUIPMENT AND CONDUCTORS
- CONDUIT, WIRING OR EQUIPMENT TO BE REMOVED

LADDER LOGIC SYMBOL LEGEND

INDICATOR LIGHT	INDICATOR LIGHT A – AMBER G – GREEN B – BLUE R – RED C – CLEAR W – WHITE
LIMIT SWITCH	LIMIT SWITCH, NORMALLY OPEN
LIMIT SWITCH	LIMIT SWITCH, NORMALLY CLOSED
TIME DELAY CONTACT	TIME DELAY CONTACT, NORMALLY OPEN, TIME TO CLOSE
TIME DELAY CONTACT	TIME DELAY CONTACT, NORMALLY CLOSED, TIME TO OPEN
TIME DELAY CONTACT	TIME DELAY CONTACT, NORMALLY OPEN, TIME TO OPEN
TIME DELAY CONTACT	TIME DELAY CONTACT, NORMALLY CLOSED, TIME TO CLOSE
RELAY CONTACT, NC RELAY CONTACT, NO	RELAY CONTACT, INSTANTANEOUS CHANGE
PRESSURE SWITCH	PRESSURE SWITCH, NORMALLY OPEN
PRESSURE SWITCH	PRESSURE SWITCH, NORMALLY CLOSED
LADDER LOGIC LINETYPES COMPONENT INSTALLED INSIDE ENCLOSURE COMPONENT INSTALLED ON FRONT OF ENCLOSURE FIELD CONNECTED COMPONENT	

RELAY (XYZ 123)	RELAY TR – TIMED RELAY CR – CONTROL RELAY
FLOAT SWITCH	FLOAT SWITCH, NORMALLY OPEN
FLOAT SWITCH	FLOAT SWITCH, NORMALLY CLOSED
PUSHBUTTON	PUSHBUTTON, NORMALLY CLOSED
PUSHBUTTON	PUSHBUTTON, NORMALLY OPEN
THERMOSTAT	THERMO SWITCH, NORMALLY OPEN
THERMOSTAT	THERMO SWITCH, NORMALLY CLOSED
FLOWSWITCH	FLOWSWITCH, NORMALLY OPEN
FLOWSWITCH	FLOWSWITCH, NORMALLY CLOSED
	2 POLE SWITCH
	3 POLE SWITCH

GENERAL NOTES

1. THIS IS A STANDARD LEGEND. NOT ALL OF THE INFORMATION SHOWN ON THIS PAGE WILL APPEAR IN THIS SET OF PLANS.

2. THESE DRAWINGS ARE DIAGRAMMATIC ONLY; EXACT LOCATIONS OF ELECTRICAL EQUIPMENT SHALL BE DETERMINED IN THE FIELD BY THE CONTRACTOR. THE INSTALLATION OF ALL EQUIPMENT SHOWN ON THESE DRAWINGS OR DESCRIBED IN THE SPECIFICATIONS SHALL CONFORM TO THE REQUIREMENTS SET FORTH IN THE LATEST EDITIONS OF ALL APPLICABLE CODES AND UTILITY COMPANY STANDARDS. CONTACT THE UTILITY COMPANY REPRESENTATIVES AND VERIFY THEIR REQUIREMENTS.

3. NOTIFY THE ENGINEER IMMEDIATELY IF CONFLICTS IN EQUIPMENT LOCATIONS ARE DISCOVERED OR IF PROBLEMS ARISE DUE TO FIELD CONDITIONS, LACK OF INFORMATION OR ANY OTHER REASON. NO PAYMENT WILL BE MADE FOR CHANGES WHICH HAVE NOT BEEN REVIEWED BY THE ENGINEER.

RH2

GODFREY G. DILLARD, STATE OF WASHINGTON, 31196, REGISTERED PROFESSIONAL ENGINEER
SIGNED: 12/8/2023

CHRISTOPHER MICHAEL FINDERS, STATE OF WASHINGTON, 45317, REGISTERED PROFESSIONAL ENGINEER
SIGNED: 12/8/2023

CITY OF BONNEY LAKE
GRAINGER SPRINGS
PUMP HOUSE REPLACEMENT

BONNEY Lake

ELECTRICAL LEGEND

JOB NO.: 214231
CLIENT: BON
FILENAME: GRS-D-E01.DWG
SAVE DATE: Oct 17, 2023
PLOT DATE: Dec 11, 2023
ENGINEER: KES
REVIEWED: CMR

REVISIONS

NO.	DATE	DESCRIPTION	BY	REVIEW

SCALE: SHOWN
0" 1" 2"
DRAWING IS FULL SCALE WHEN BAR MEASURES 2"

DWG NO.: E01
SHEET NO.: 29 / 50

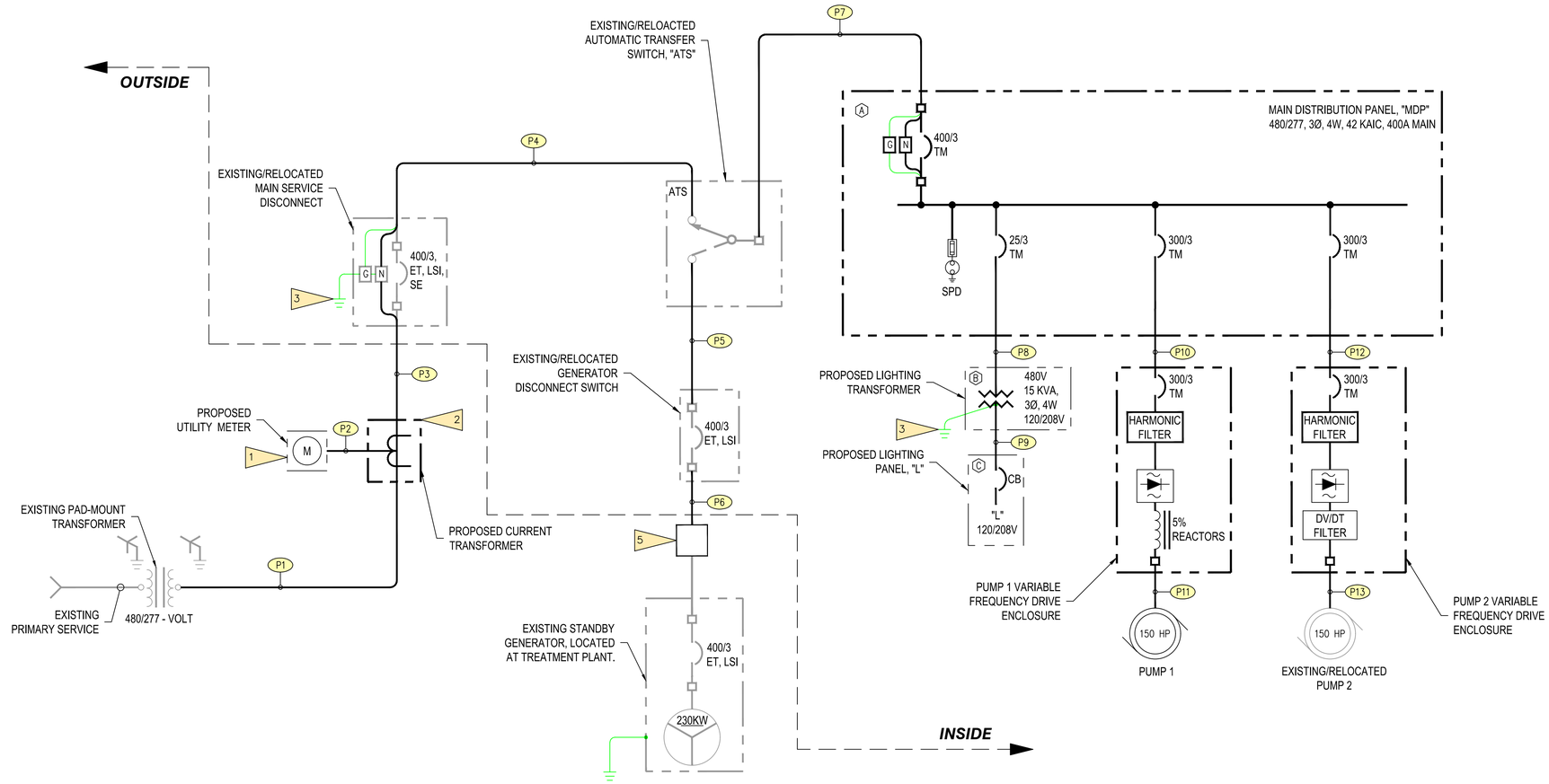

ONE-LINE DIAGRAM

NOT TO SCALE

ELECTRICAL NOTES	
1	1. PROPOSED MAIN REVENUE METERING. METER BY PUGET SOUND ENERGY. ENCLOSURE PROVIDED BY CONTRACTOR PER PUGET SOUND ENERGY REQUIREMENTS.
2	2. PROPOSED NEMA 3R CURRENT TRANSFORMER ENCLOSURE PER UTILITY REQUIREMENTS.
3	3. SEE GROUNDING DETAIL, THIS SHEET.
4	4. GROUND ROD PER N.E.C. (TYPICAL). SEE DWG NO. E13 FOR DETAIL.
5	5. CONTRACTOR SHALL INTERCEPT EXISTING POWER TO EXISTING GENERATOR WITH HANDHOLE. CONTRACTOR SHALL SPLICE EXISTING CONDUCTORS TO PROPOSED CONDUCTORS AND EXTEND PROPOSED CONDUCTORS WITH CONDUIT TO EXISTING/RELOCATED GENERATOR DISCONNECT SWITCH.
XX	6. SEE DWG NO. E15 FOR CONDUIT AND CONDUCTOR SCHEDULE.
X	7. SEE DWG NO. E15 FOR ELECTRICAL EQUIPMENT SCHEDULE.

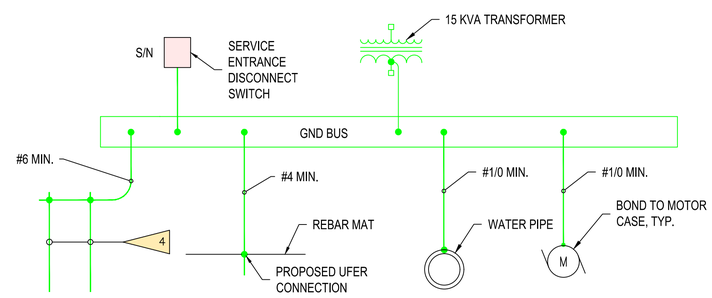

GROUNDING

NO SCALE

STATION LOAD CALCULATIONS		
PUMP 1 (150 HP)	180.0A X 1.25 =	225.0 AMPS
EXISTING/RELOCATED PUMP 2 (150 HP)	180.0A X 0.00 =	00.0 AMPS
TRANSFORMER (15 kVA)	18.0A X 1.00 =	18.0 AMPS
TOTAL		243.0 AMPS

RH2

GODFREY G. DILLARD, STATE OF WASHINGTON, 31196, REGISTERED PROFESSIONAL ENGINEER

SIGNED: 12/8/2023

CHRISTOPHER MICHAEL ROGERS, STATE OF WASHINGTON, 45317, REGISTERED PROFESSIONAL ENGINEER

SIGNED: 12/8/2023

CITY OF BONNEY LAKE
GRAINGER SPRINGS
PUMP HOUSE REPLACEMENT

ONE-LINE DIAGRAM

BONNEY Lake

JOB NO.: 21-0291
CLIENT: BON
FILENAME: GRS-S-E02.DWG
ENGINEER: KES
REVIEWED: CMR
SAVE DATE: Oct 17, 2023
PLOT DATE: Dec 11, 2023

REVISIONS

NO.	DATE	DESCRIPTION	BY	REVIEW

SCALE: SHOWN

0" 1" 2"

DRAWING IS FULL SCALE WHEN BAR MEASURES 2"

DWG NO.: E02

SHEET NO.: 30 / 50

ELECTRICAL SITE PLAN

1" = 10'

ELECTRICAL NOTES

1	1. CONTRACTOR SHALL INTERCEPT EXISTING CONDUITS WITH HANDHOLE. CONTRACTOR SHALL SPLICE EXISTING CONDUCTORS TO PROPOSED CONDUCTORS AND EXTEND PROPOSED CONDUCTORS WITH CONDUIT. SEE HANDHOLE DETAIL ON DWG NO. E13.
2	2. ABANDON EXISTING CONDUIT/CONDUCTORS AFTER HANDHOLE.
3	3. STUB UP (C11) CONDUIT ABOVE GRADE AND CAP FOR FUTURE USE.
4	4. PROPOSED SECONDARY POWER SERVICE. CONTRACTOR SHALL PROVIDE TRENCHING, BACKFILL, COMPACTION, RESTORATION, RACEWAY, AND CONDUCTORS PER UTILITY STANDARDS.
(XX)	5. SEE DWG NO. E15 FOR CONDUIT AND CONDUCTOR SCHEDULE.
(X)	6. SEE DWG NO. E15 FOR ELECTRICAL EQUIPMENT SCHEDULE.

RH2

GODFREY G. DILLARD, STATE OF WASHINGTON, 31196, REGISTERED PROFESSIONAL ENGINEER

SIGNED: 12/8/2023

CHRISTOPHER MICHAEL FLEGERS, STATE OF WASHINGTON, 45317, REGISTERED PROFESSIONAL ENGINEER

SIGNED: 12/8/2023

CITY OF BONNEY LAKE
GRAINGER SPRINGS
PUMP HOUSE REPLACEMENT

BONNEY Lake

ELECTRICAL SITE PLAN

ENGINEER: KES
REVIEWED: CMR
SAVE DATE: Oct 26, 2023
PLOT DATE: Dec 11, 2023
CLIENT: BON
FILENAME: GRS-D-E03.DWG
JOB NO.: 21-0291

REVISIONS

NO.	DATE	DESCRIPTION	BY	REVIEW

SCALE: SHOWN

0" 1" 2"

DRAWING IS FULL SCALE WHEN BAR MEASURES 2"

DWG NO.: E03

SHEET NO.: 31 / 50

EXISTING PUMP HOUSE ELECTRICAL EQUIPMENT

NO SCALE

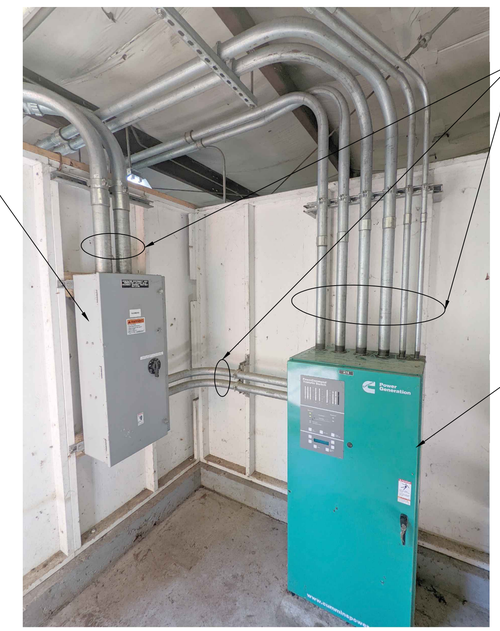

EXISTING GENERATOR DISCONNECT AND EXISTING AUTOMATIC TRANSFER SWITCH

NO SCALE

RH2

GODFREY G. DILLARD — STATE OF WASHINGTON — 31196 — REGISTERED PROFESSIONAL ENGINEER

SIGNED: 12/8/2023

CHRISTOPHER MICHAEL ROGERS — STATE OF WASHINGTON — 45317 — REGISTERED PROFESSIONAL ENGINEER

SIGNED: 12/8/2023

CITY OF BONNEY LAKE
GRAINGER SPRINGS PUMP HOUSE REPLACEMENT

BONNEY LAKE

ELECTRICAL DEMOLITION PLAN

ENGINEER: KES | SAVE DATE: Oct 26, 2023 | CLIENT: BON | JOB NO.: 21-0291
REVIEWED: CMR | PLOT DATE: Dec 11, 2023 | FILENAME: GRS-D-E04-DWG

REVISIONS

NO.	DATE	DESCRIPTION	BY	REVIEW

SCALE: SHOWN

0" 1" 2"

DRAWING IS FULL SCALE WHEN BAR MEASURES 2"

DWG NO.: E04 | SHEET NO.: 32 / 50

ELECTRICAL NOTES	
1	1. SEE ELECTRICAL SITE PLAN ON DWG NO. E03 FOR CONTINUATION.
XX	2. SEE DWG NO. E15 FOR CONDUIT AND CONDUCTOR SCHEDULE.
X	3. SEE DWG NO. E15 FOR ELECTRICAL EQUIPMENT SCHEDULE.

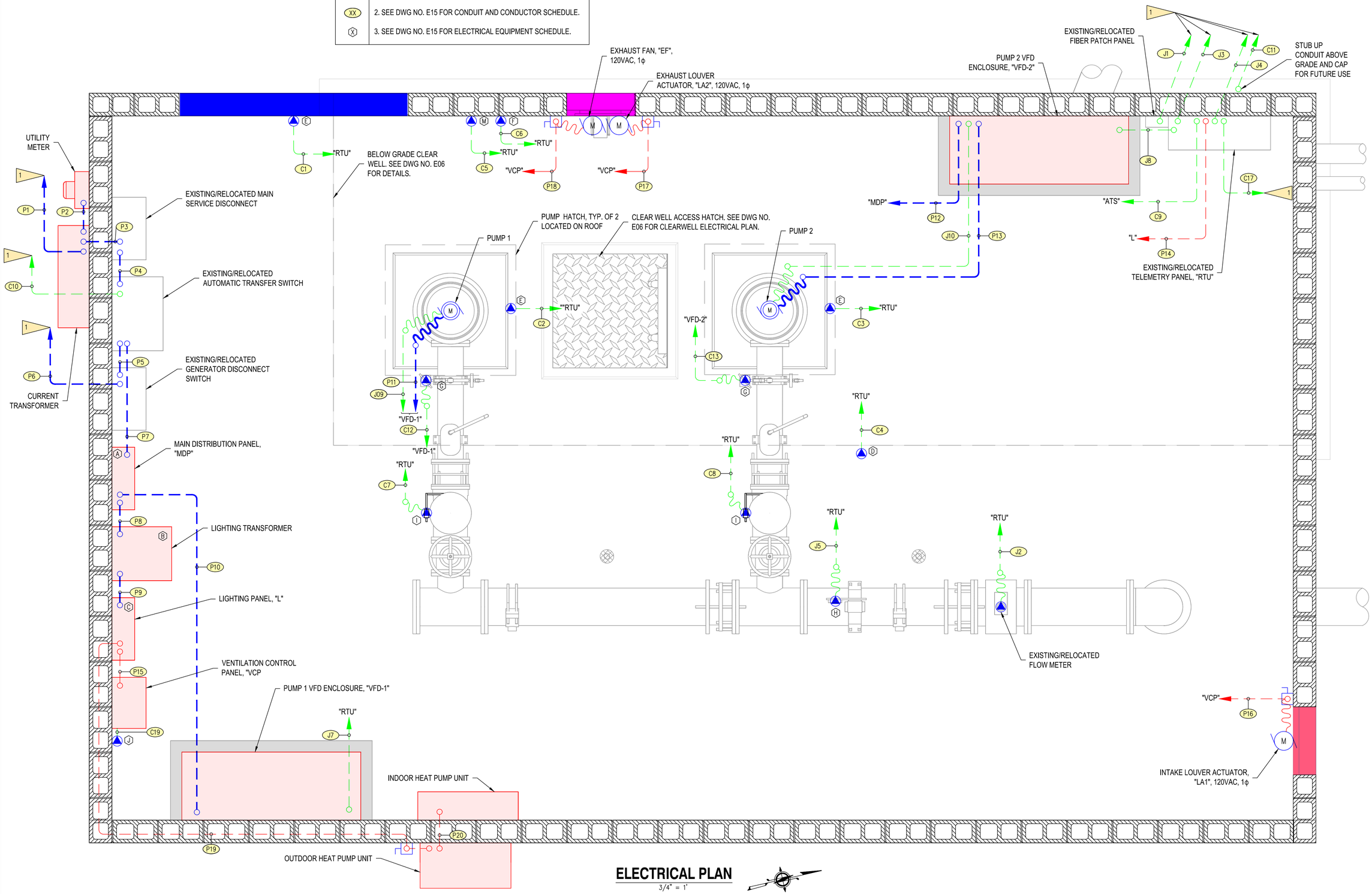

ELECTRICAL PLAN

3/4" = 1'

RH2

SIGNED: 12/8/2023

SIGNED: 12/8/2023

CITY OF BONNEY LAKE
GRAINGER SPRINGS
PUMP HOUSE REPLACEMENT

PUMP HOUSE POWER DISTRIBUTION AND SIGNAL PLAN

JOB NO.: 21-0231
CLIENT: BON
FILENAME: GRS-D-E04.DWG
SAVE DATE: Oct 26, 2023
PLOT DATE: Dec 11, 2023
ENGINEER: KES
REVIEWED: CMR

REVISIONS

NO.	DATE	DESCRIPTION	BY	REVIEW

SCALE: SHOWN

0" 1" 2"

DRAWING IS FULL SCALE WHEN BAR MEASURES 2"

DWG NO.: E05

SHEET NO.: 33 / 50

ELECTRICAL NOTES	
1	1. SEE PUMP HOUSE POWER DISTRIBUTION AND SIGNAL PLAN ON DWG NO. E05 FOR CONTINUATION.
2	2. SEE ELECTRICAL SITE PLAN ON DWG NO. E03 FOR CONTINUATION.
XX	3. SEE DWG NO. E15 FOR CONDUIT AND CONDUCTOR SCHEDULE.
X	4. SEE DWG NO. E15 FOR ELECTRICAL EQUIPMENT SCHEDULE.

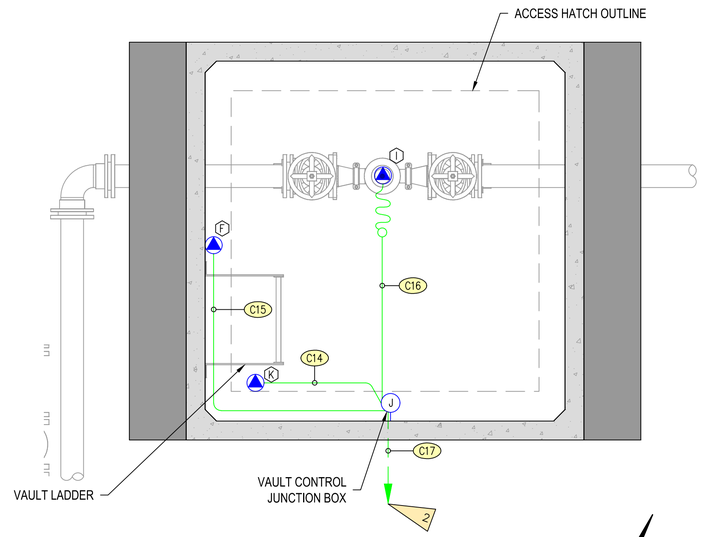

RECIRCULATING VALVE VAULT AND CHECK VALVE VAULT ELECTRICAL PLAN

½" = 1'-0"

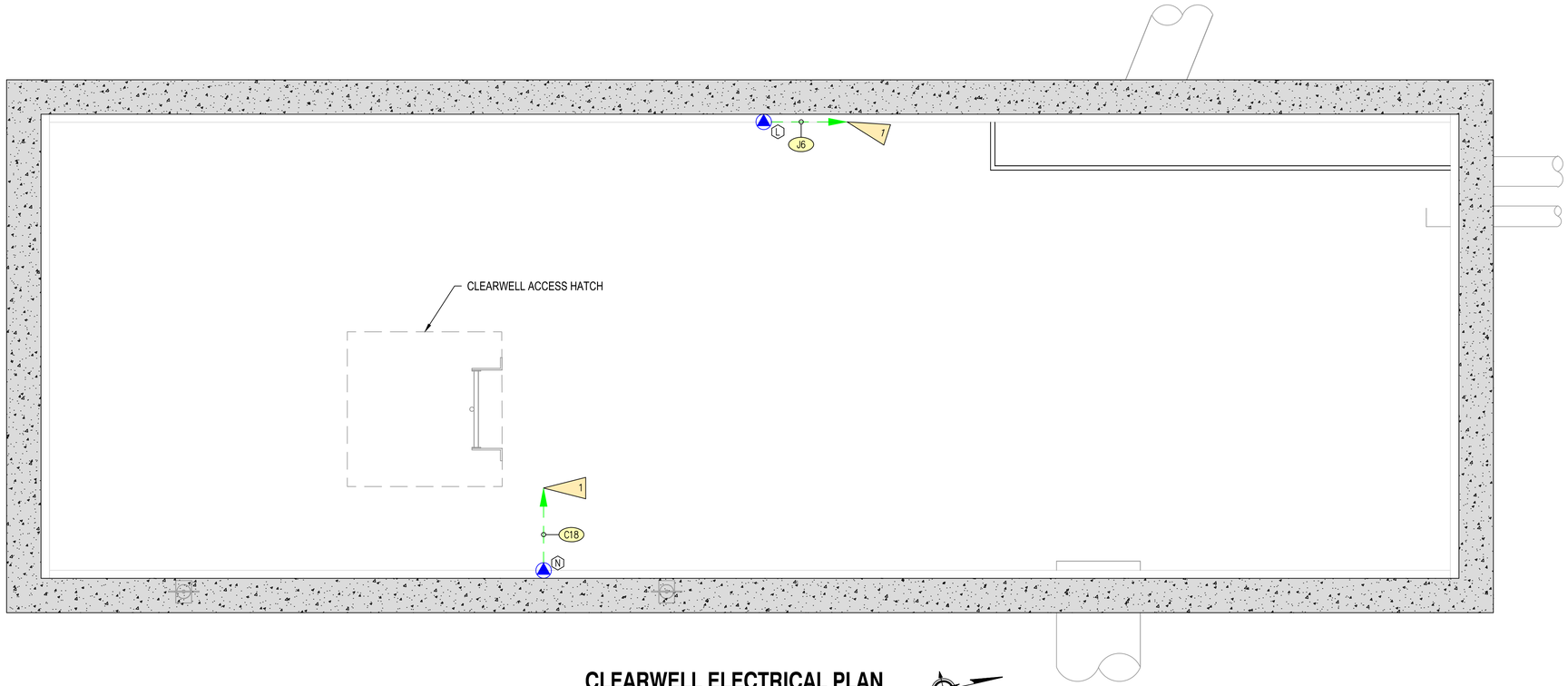

CLEARWELL ELECTRICAL PLAN

½" = 1'-0"

RH2

GODFREY G. DILLARD
STATE OF WASHINGTON
31196
REGISTERED PROFESSIONAL ENGINEER

SIGNED: 12/8/2023

CHRISTOPHER MICHAEL FLEGERS
STATE OF WASHINGTON
45317
REGISTERED PROFESSIONAL ENGINEER

SIGNED: 12/8/2023

CITY OF BONNEY LAKE
GRAINGER SPRINGS
PUMP HOUSE REPLACEMENT

BONNEY Lake

VAULT AND CLEARWELL POWER DISTRIBUTION AND SIGNAL PLAN

ENGINEER: KES
REVIEWED: CMR
SAVE DATE: Oct 26, 2023
PLOT DATE: Dec 11, 2023
CLIENT: BON
FILENAME: GRS-D-E04.DWG
JOB NO.: 21-0291

REVISIONS

NO.	DATE	DESCRIPTION	BY	REVIEW

SCALE: SHOWN

0" 1" 2"

DRAWING IS FULL SCALE WHEN BAR MEASURES 2"

DWG NO.: E06

SHEET NO.: 34 / 50

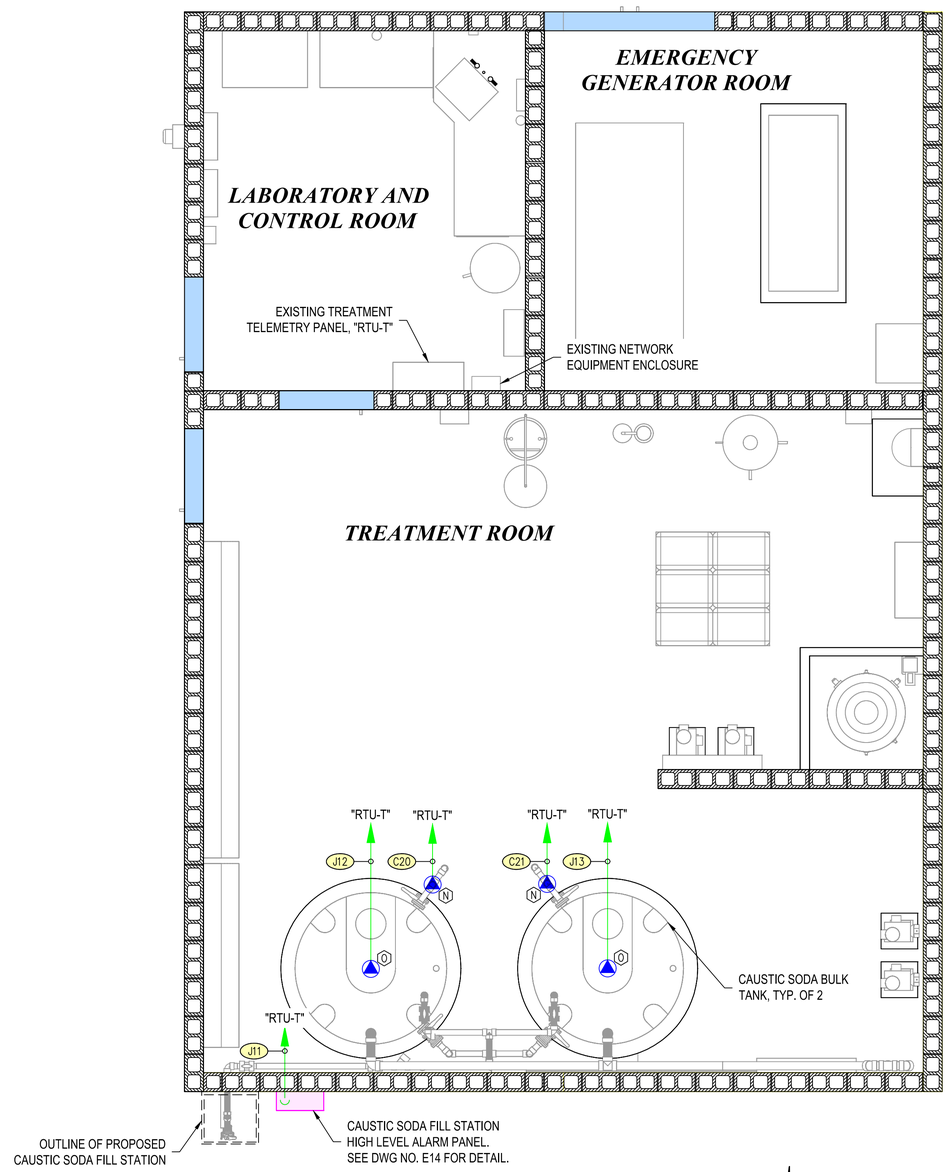

TREATMENT BUILDING ELECTRICAL PLAN

3/8" = 1'-0"

ELECTRICAL NOTES	
XX	1. SEE DWG NO. E15 FOR CONDUIT AND CONDUCTOR SCHEDULE.
X	2. SEE DWG NO. E15 FOR ELECTRICAL EQUIPMENT SCHEDULE.

RH2

GODFREY G. DILLARD, STATE OF WASHINGTON, 31196, REGISTERED PROFESSIONAL ENGINEER

SIGNED: 12/8/2023

CHRISTOPHER MICHAEL ROBERTS, STATE OF WASHINGTON, 45317, REGISTERED PROFESSIONAL ENGINEER

SIGNED: 12/8/2023

CITY OF BONNEY LAKE

GRAINGER SPRINGS PUMP HOUSE REPLACEMENT

TREATMENT BUILDING POWER DISTRIBTION AND SIGNAL PLAN (BID ADD)

BONNEY Lake

ENGINEER: KES | SAVE DATE: Oct 17, 2023 | CLIENT: BON | JOB NO.: 21-0291

REVIEWED: CMR | PLOT DATE: Dec 11, 2023 | FILENAME: GRS-D-E12.DWG

REVISIONS

NO.	DATE	DESCRIPTION	BY	REVIEW

SCALE: SHOWN

0" 1" 2"

DRAWING IS FULL SCALE WHEN BAR MEASURES 2"

DWG NO.: E07

SHEET NO.: 35 / 50

ELECTRICAL NOTES	
A#	1. SEE DWG NO. E15 FOR LIGHTING FIXTURE SCHEDULE.
(X)	2. SEE DWG NO. E15 FOR ELECTRICAL EQUIPMENT SCHEDULE.
	3. PROVIDE AND INSTALL LABELS FOR ALL LIGHT SWITCHES. LABELS SHALL INDICATE THE DEVICE CONTROLLED BY THE SWITCH.
	4. LOCATE ALL LIGHT FIXTURES, SWITCHES, AND DEVICES IN LOCATION SHOWN ON THE PLANS USING ENGINEERING SCALE. ADJUST LOCATION AS NECESSARY TO AVOID INTERFERENCE WITH OTHER EQUIPMENT.

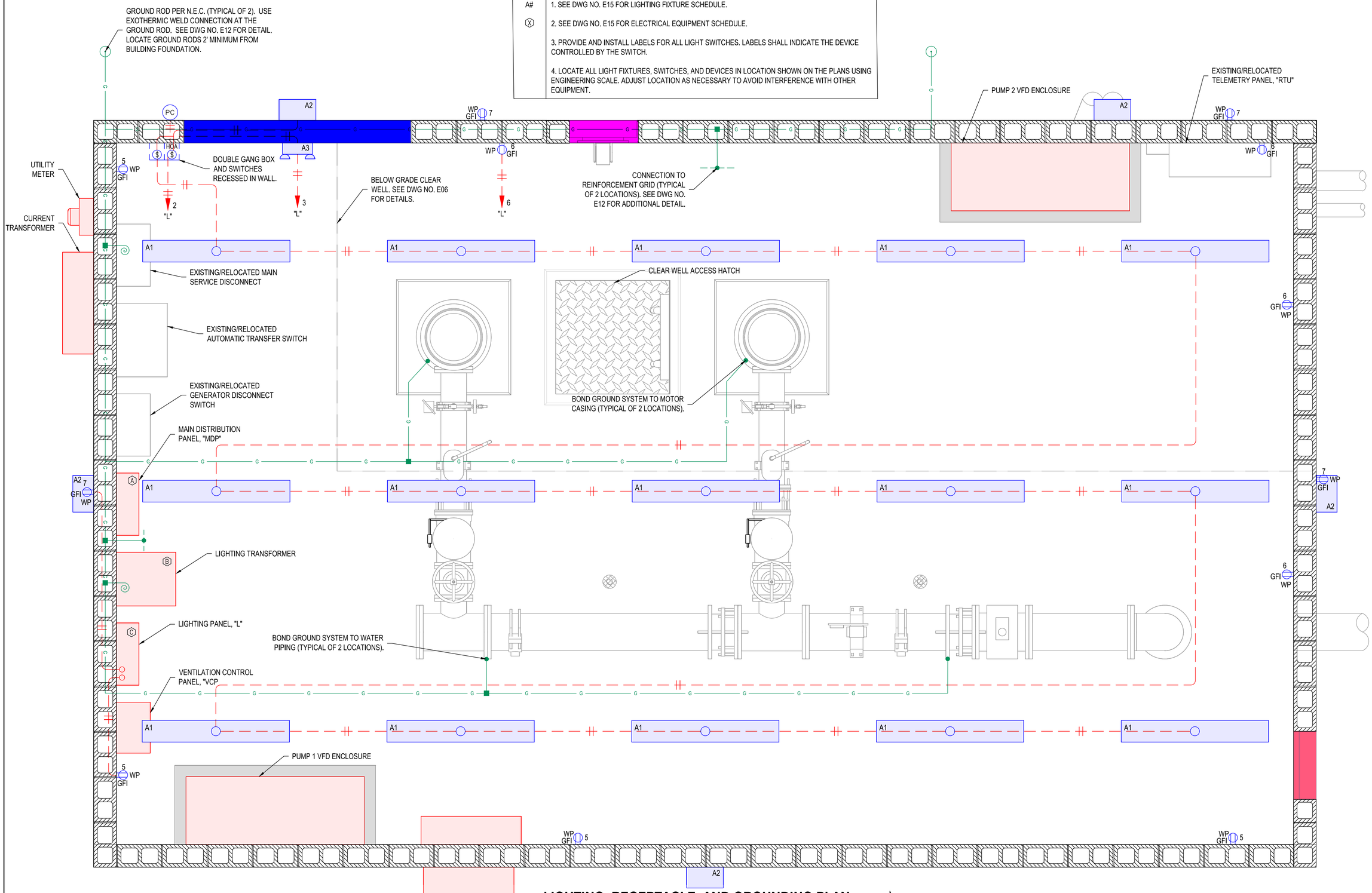

LIGHTING, RECEPTACLE, AND GROUNDING PLAN

3/4" = 1'

RH2

GODFREY G. DILLARD, STATE OF WASHINGTON, 31196, REGISTERED PROFESSIONAL ENGINEER

SIGNED: 12/8/2023

CHRISTOPHER MICHAEL FLEGERS, STATE OF WASHINGTON, 45317, REGISTERED PROFESSIONAL ENGINEER

SIGNED: 12/8/2023

CITY OF BONNEY LAKE
GRAINGER SPRINGS
PUMP HOUSE REPLACEMENT

BONNEY Lake

LIGHTING, RECEPTACLE, AND GROUNDING PLAN

ENGINEER: KES
REVIEWED: CMR
SAVE DATE: Oct 26, 2023
PLOT DATE: Dec 11, 2023
CLIENT: BON
FILENAME: GRS-D-E05.DWG
JOB NO: 21-0291

REVISIONS

NO.	DATE	DESCRIPTION	BY	REVIEW

SCALE: SHOWN

0" 1" 2"

DRAWING IS FULL SCALE WHEN BAR MEASURES 2"

DWG NO.: E08

SHEET NO.: 36 / 50

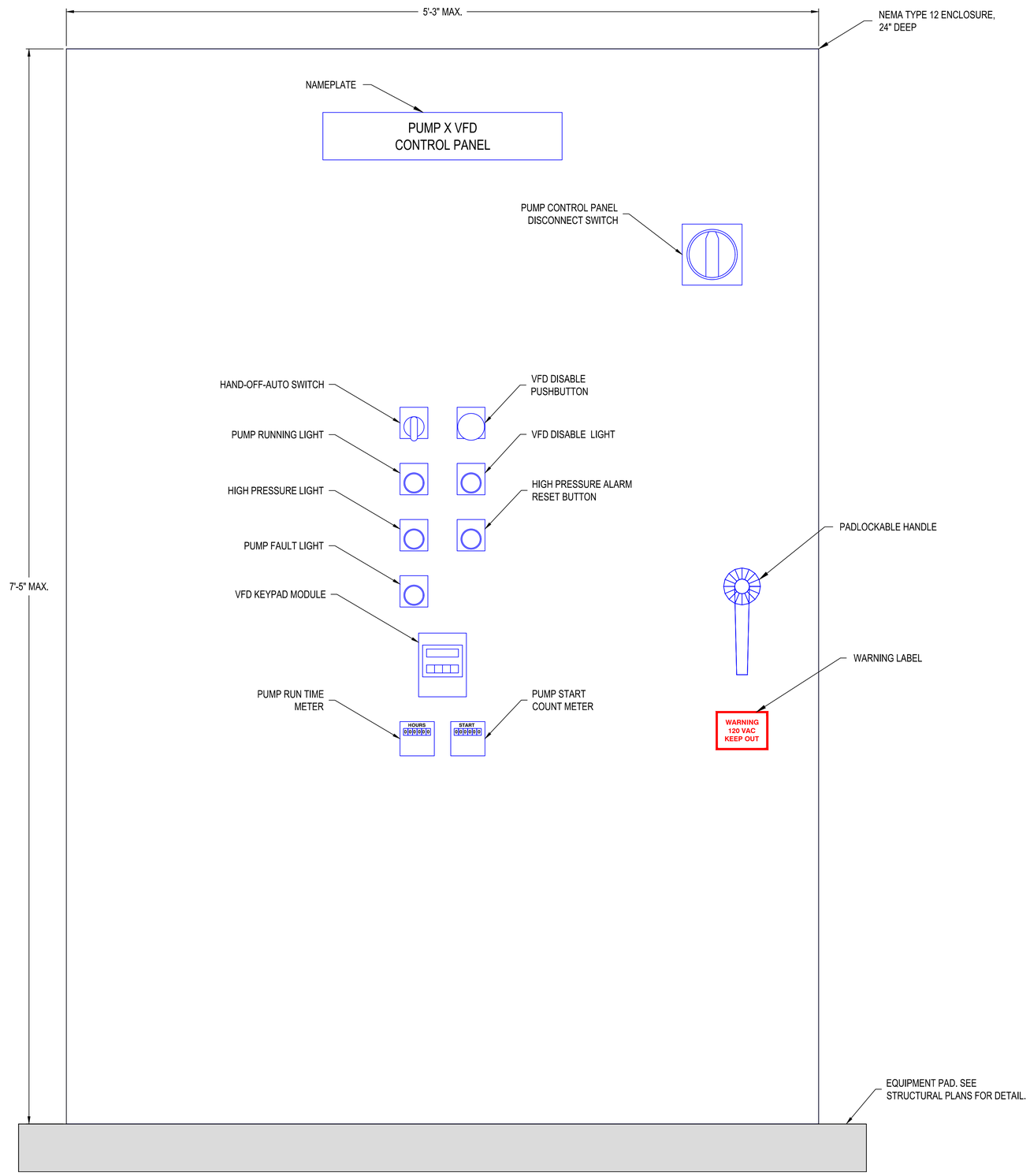

VFD CONTROL PANEL, TYP.

NOT TO SCALE

RH2

GODFREY G. DILLARD, STATE OF WASHINGTON, 31196, REGISTERED PROFESSIONAL ENGINEER

SIGNED: 12/8/2023

CHRISTOPHER MICHAEL ROBERTS, STATE OF WASHINGTON, 45317, REGISTERED PROFESSIONAL ENGINEER

SIGNED: 12/8/2023

CITY OF BONNEY LAKE
GRAINGER SPRINGS
PUMP HOUSE REPLACEMENT

BONNEY Lake

VFD PANEL LAYOUT

ENGINEER: KES
REVIEWED: CMR
DATE: Oct 17, 2023
PLOT DATE: Dec 11, 2023
CLIENT: BON
FILENAME: GRS-D-E06.DWG
JOB NO.: 21-0291

REVISIONS

NO.	DATE	DESCRIPTION	BY	REVIEW

SCALE: SHOWN

0" 1" 2"

DRAWING IS FULL SCALE WHEN BAR MEASURES 2"

DWG NO.: E09

SHEET NO.: 37 / 50

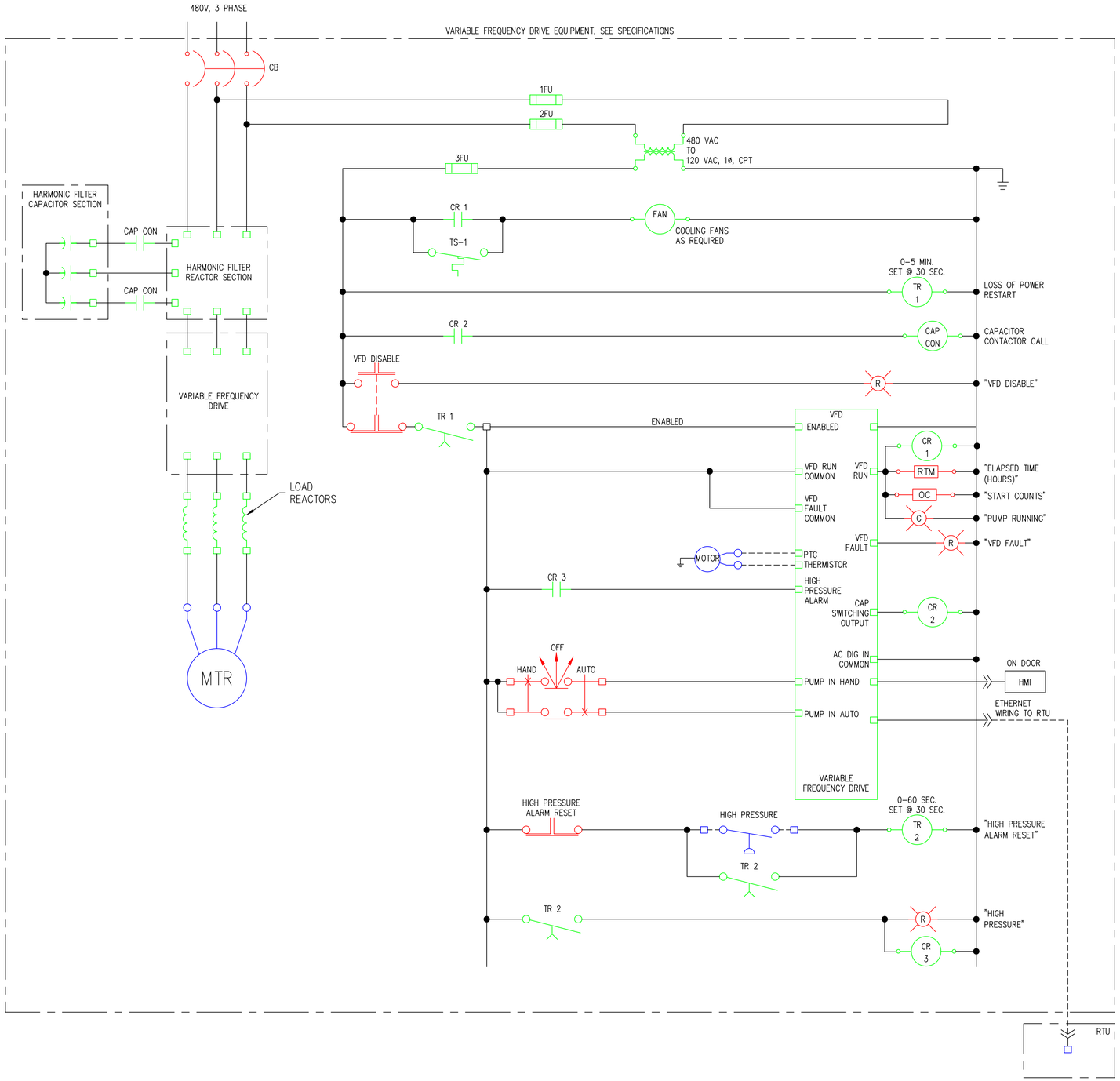

DIAGRAM 1: PUMP 1

NO SCALE

RH2

GODFREY G. DILLARD
STATE OF WASHINGTON
31196
REGISTERED PROFESSIONAL ENGINEER

SIGNED: 12/8/2023

CHRISTOPHER MICHAEL FLEMING
STATE OF WASHINGTON
45317
REGISTERED PROFESSIONAL ENGINEER

SIGNED: 12/8/2023

CITY OF BONNEY LAKE
GRAINGER SPRINGS
PUMP HOUSE REPLACEMENT

BONNEY Lake

CONTROL LOGIC DIAGRAMS 1

ENGINEER: KES
REVIEWED: CMR
SAVE DATE: Oct 17, 2023
PLOT DATE: Dec 11, 2023
CLIENT: BON
FILENAME: GRS-D-E07.DWG
JOB NO: 21-0231

REVISIONS

NO.	DATE	DESCRIPTION	BY	REVIEW

SCALE: SHOWN
0" 1" 2"
DRAWING IS FULL SCALE WHEN BAR MEASURES 2"

DWG NO.: E10
SHEET NO.: 38 / 50

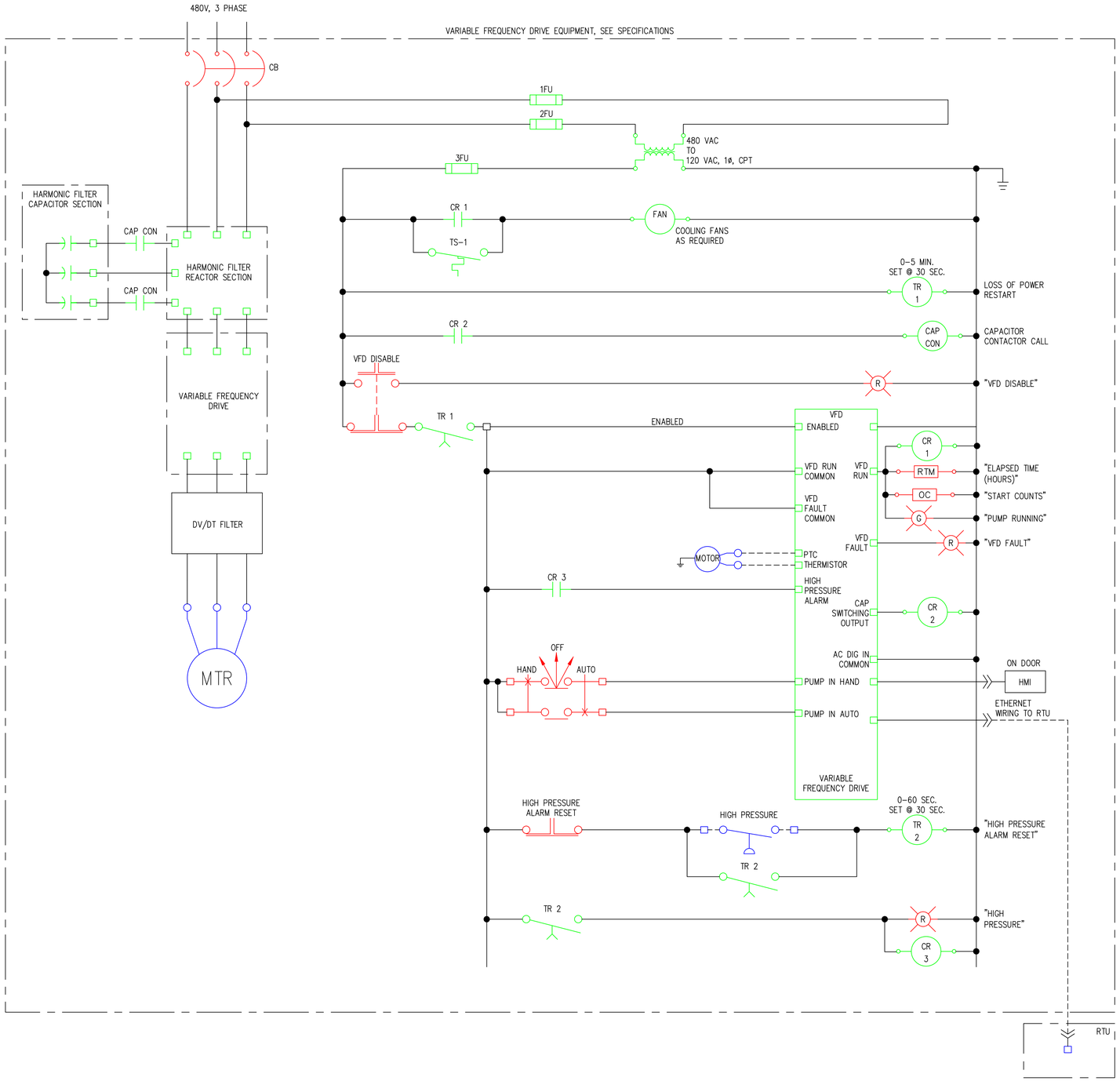

DIAGRAM 2: PUMP 2

NO SCALE

RH2

GODFREY G. DILLARD
STATE OF WASHINGTON
31198
REGISTERED PROFESSIONAL ENGINEER

SIGNED: 12/8/2023

CHRISTOPHER MICHAEL FINDERS
STATE OF WASHINGTON
45317
REGISTERED PROFESSIONAL ENGINEER

SIGNED: 12/8/2023

CITY OF BONNEY LAKE
GRAINGER SPRINGS
PUMP HOUSE REPLACEMENT

BONNEY Lake

CONTROL LOGIC DIAGRAMS 2

ENGINEER: KES
REVIEWED: CMR
SAVE DATE: Oct 17, 2023
PLOT DATE: Dec 11, 2023
CLIENT: BON
FILENAME: GRS-D-E07.DWG
JOB NO.: 21-0231

REVISIONS

NO.	DATE	DESCRIPTION	BY	REVIEW

SCALE: SHOWN
0" 1" 2"
DRAWING IS FULL SCALE WHEN BAR MEASURES 2"

DWG NO.: E11
SHEET NO.: 39 / 50

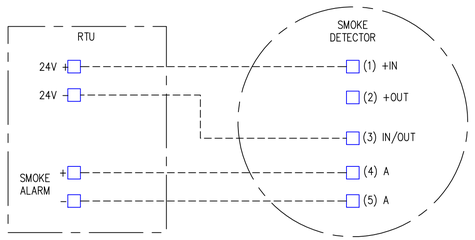

DIAGRAM 3: BUILDING SMOKE DETECTOR CIRCUIT

NO SCALE

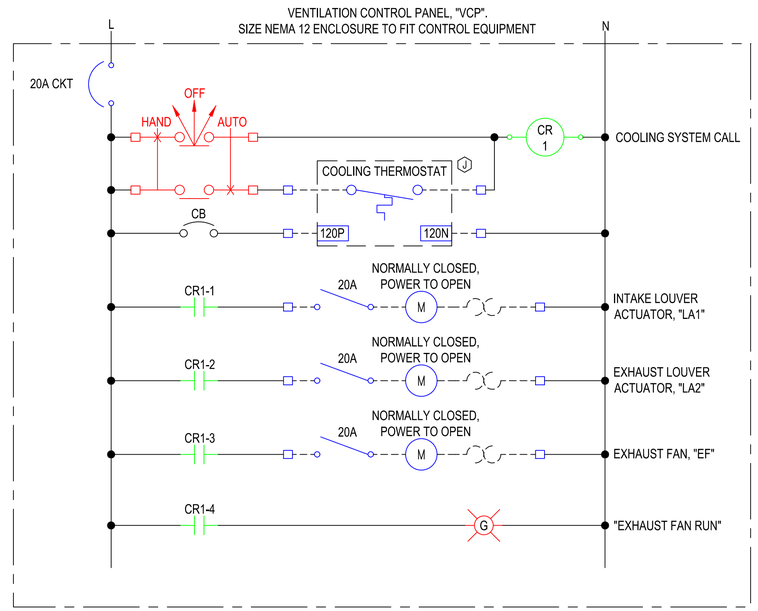

DIAGRAM 5: VENTILATION CONTROL PANEL, "VCP"

NO SCALE

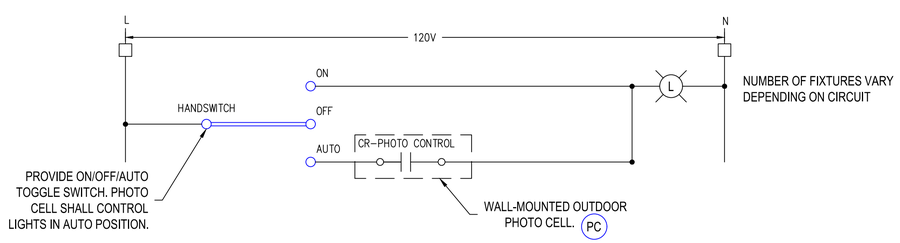

DIAGRAM 4: EXTERIOR BUILDING LIGHTING CIRCUIT DIAGRAM

NO SCALE

RH2

SIGNED: 12/8/2023

SIGNED: 12/8/2023

CITY OF BONNEY LAKE
GRAINGER SPRINGS
PUMP HOUSE REPLACEMENT

BONNEY Lake

CONTROL LOGIC DIAGRAMS 3

ENGINEER: KES
REVIEWED: CMR
SAVE DATE: Oct 17, 2023
PLOT DATE: Dec 11, 2023
CLIENT: BON
FILENAME: GRS-D-E07.DWG
JOB NO.: 21-0231

REVISIONS

NO.	DATE	DESCRIPTION	BY	REVIEW

SCALE: SHOWN

0" 1" 2"

DRAWING IS FULL SCALE WHEN BAR MEASURES 2"

DWG NO.: E12

SHEET NO.: 40 / 50

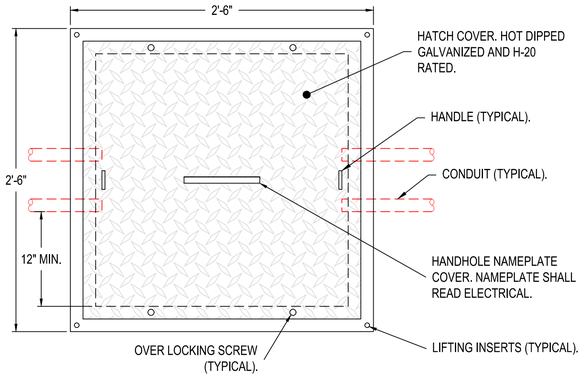

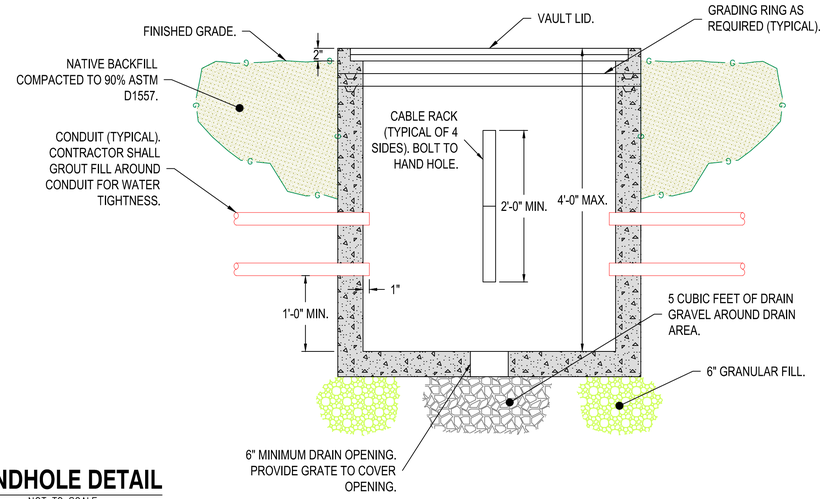

HANDHOLE DETAIL

NOT TO SCALE

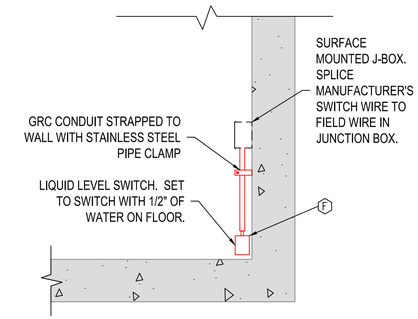

FLOOD SWITCH DETAIL

NOT TO SCALE

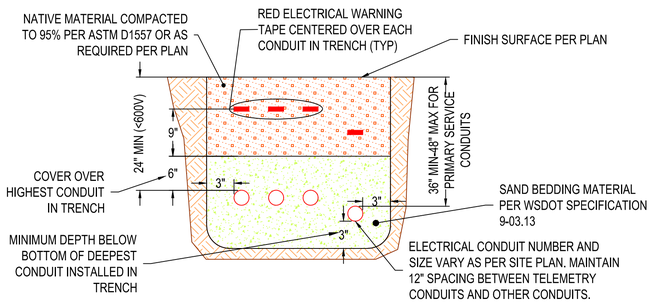

TYPICAL ELECTRICAL TRENCH DETAIL

NOT TO SCALE

NOTE: BURY DEPTH OF CONDUIT AND HORIZONTAL SPACING SHALL BE CONFIRMED WITH SERVING UTILITY BEFORE CONSTRUCTION.

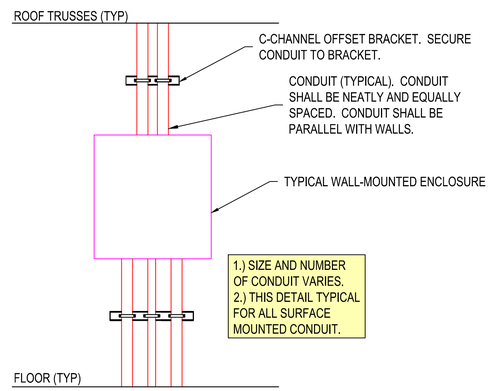

SURFACE MOUNTED CONDUIT DETAIL

NOT TO SCALE

BUILDING INTRUSION SWITCH DETAIL

NOT TO SCALE

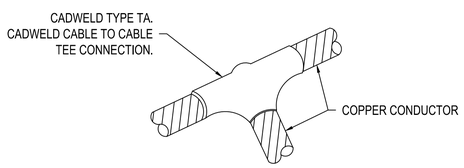

GROUND TEE DETAIL

NO SCALE

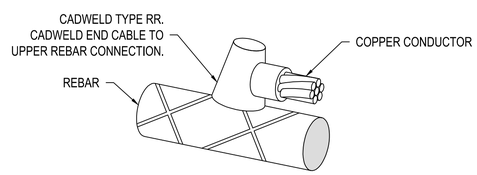

GROUND REBAR DETAIL

NO SCALE

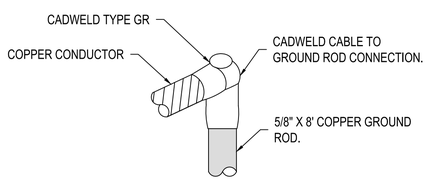

GROUND TEE DETAIL

NO SCALE

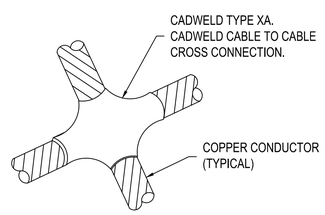

GROUNDING CROSS DETAIL

NO SCALE

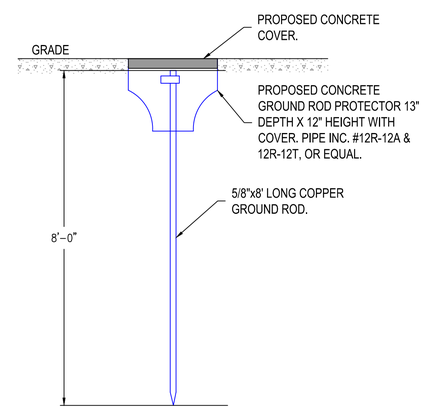

GROUND ROD DETAIL

NOT TO SCALE

RH2

GODFREY G. DILLARD, STATE OF WASHINGTON, 31196, REGISTERED PROFESSIONAL ENGINEER

SIGNED: 12/8/2023

CHRISTOPHER MICHAEL FLEGERS, STATE OF WASHINGTON, 45317, REGISTERED PROFESSIONAL ENGINEER

SIGNED: 12/8/2023

CITY OF BONNEY LAKE
GRAINGER SPRINGS
PUMP HOUSE REPLACEMENT

BONNEY Lake

ELECTRICAL DETAILS 1

JOB NO.: 21-0231
CLIENT: BON
FILENAME: GRS-D-E08.DWG
SAVE DATE: Oct 17, 2023
PLOT DATE: Dec 11, 2023
ENGINEER: KES
REVIEWED: CMR

REVISIONS

NO.	DATE	DESCRIPTION	BY	REVIEW

SCALE: SHOWN

0" 1" 2"

DRAWING IS FULL SCALE WHEN BAR MEASURES 2"

DWG NO.: E13

SHEET NO.: 41 / 50

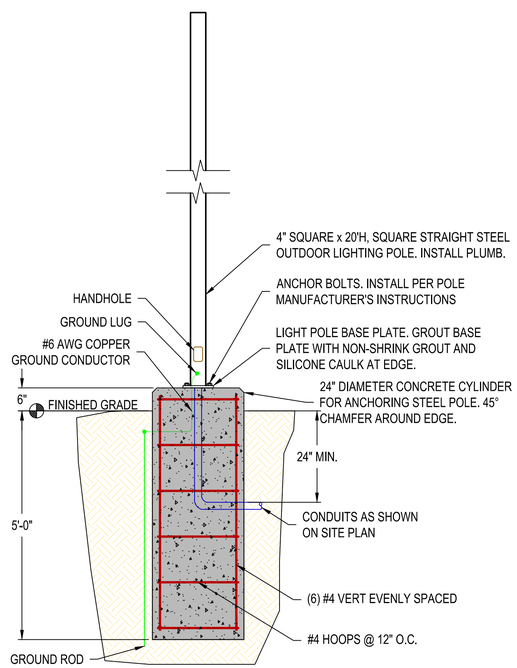

SECURITY POLE DETAIL

NOT TO SCALE

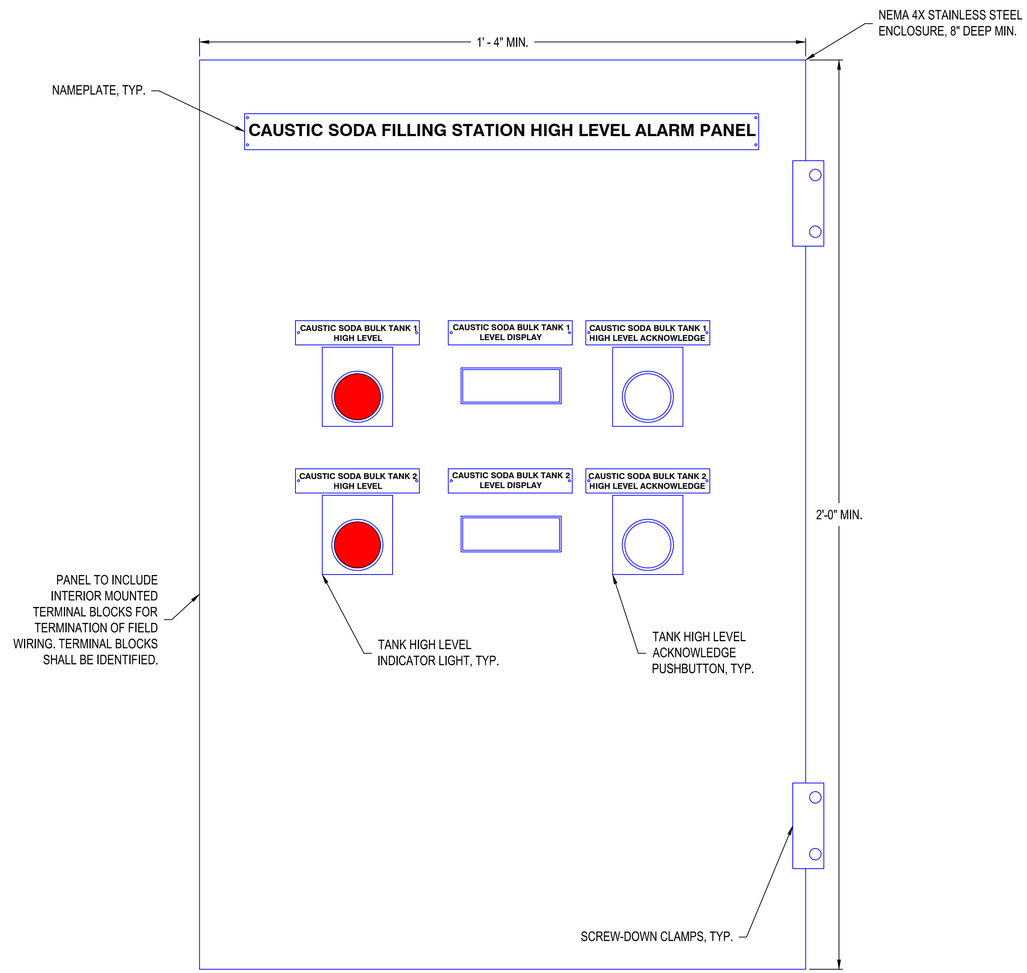

CAUSTIC SODA FILLING STATION HIGH LEVEL ALARM PANEL EXTERIOR LAYOUT

NOT TO SCALE

RH2

GODFREY G. DILLARD, STATE OF WASHINGTON, 31196, REGISTERED PROFESSIONAL ENGINEER

SIGNED: 12/8/2023

CHRISTOPHER MICHAEL ROBERTS, STATE OF WASHINGTON, 45317, REGISTERED PROFESSIONAL ENGINEER

SIGNED: 12/8/2023

CITY OF BONNEY LAKE
GRAINGER SPRINGS
PUMP HOUSE REPLACEMENT

BONNEY Lake

ELECTRICAL DETAILS 2

JOB NO: 21-0291
CLIENT: BON
FILENAME: GRS-D-E08.DWG
ENGINEER: KES
REVIEWED: CMR
SAVE DATE: Oct 17, 2023
PLOT DATE: Dec 11, 2023

REVISIONS

NO.	DATE	DESCRIPTION	BY	REVIEW

SCALE: SHOWN

0" 1" 2"

DRAWING IS FULL SCALE WHEN BAR MEASURES 2"

DWG NO.: E14

SHEET NO.: 42 / 50

POWER CONDUIT AND CONDUCTOR SCHEDULE

CIRCUIT	SOURCE	DESTINATION	TRADE SIZE	(QUANTITY) CONDUCTORS	NOTES
P1	EXISTING UTILITY TRANSFORMER	CURRENT TRANSFORMER	(2) 3"	(3) – #3/0, (1) – #3/0 N	PARALLEL CONDUITS
P2	CURRENT TRANSFORMER	UTILITY METER	1 1/4"	(13) – #14	
P3	CURRENT TRANSFORMER	EXISTING/RELOCATED MAIN SERVICE DISCONNECT	(2) 2"	(3) – #3/0, (1) – #3/0 N	PARALLEL CONDUITS
P4	EXISTING/RELOCATED MAIN SERVICE DISCONNECT	EXISTING/RELOCATED AUTOMATIC TRANSFER SWITCH, "ATS"	(2) 2"	(3) – #3/0, (1) – #3/0 N, (1) – #3 GRD	PARALLEL CONDUITS
P5	EXISTING/RELOCATED AUTOMATIC TRANSFER SWITCH, "ATS"	EXISTING/RELOCATED GENERATOR DISCONNECT SWITCH	(2) 2"	(3) – #3/0, (1) – #3/0 N, (1) – #3 GRD	PARALLEL CONDUITS
P6	EXISTING/RELOCATED GENERATOR DISCONNECT SWITCH	HANDHOLE	(2) 3"	(3) – #250 MCM, (1) – #250 MCM N, (1) – #1 GRD	PARALLEL CONDUITS
P7	EXISTING/RELOCATED AUTOMATIC TRANSFER SWITCH, "ATS"	MAIN DISTRIBUTION PANEL, "MDP"	(2) 2"	(3) – #3/0, (1) – #3/0 N, (1) – #3 GRD	PARALLEL CONDUITS
P8	MAIN DISTRIBUTION PANEL, "MDP"	LIGHTING TRANSFORMER	3/4"	(3) – #12, (1) – #10 GRD	
P9	LIGHTING TRANSFORMER	LIGHTING PANEL, "L"	1"	(3) – #6, (1) – #6 N, (1) – #10 GRD	
P10	MAIN DISTRIBUTION PANEL, "MDP"	PUMP 1 VARIABLE FREQUENCY DRIVE ENCLOSURE, "VFD–1"	3"	(3) – #350 MCM, (1) – #4 GRD	'
P11	PUMP 1 VARIABLE FREQUENCY DRIVE ENCLOSURE, "VFD–1"	EXISTING/RELOCATED PUMP 1	2 1/2"	(3) – #4/0, (1) – #4 GRD	
P12	MAIN DISTRIBUTION PANEL, "MDP"	PUMP 2 VARIABLE FREQUENCY DRIVE ENCLOSURE, "VFD–2"	3"	(3) – #350 MCM, (1) – #4 GRD	
P13	PUMP 2 VARIABLE FREQUENCY DRIVE ENCLOSURE, "VFD–2"	PUMP 2	2 1/2"	(3) – #4/0, (1) – #4 GRD	
P14	LIGHTING PANEL, "L"	EXISTING/RELOCATED TELEMETRY PANEL, "RTU"	3/4"	(2) – #12, (1) – #12 GRD	
P15	LIGHTING PANEL, "L"	VENTILATION CONTROL PANEL, "VCP"	3/4"	(2) – #12, (1) – #12 GRD	
P16	VENTILATION CONTROL PANEL, "VCP"	INTAKE LOUVER ACTUATOR, "LA1"	3/4"	(2) – #12, (1) – #12 GRD	
P17	VENTILATION CONTROL PANEL, "VCP"	EXHAUST LOUVER ACTUATOR, "LA2"	3/4"	(2) – #12, (1) – #12 GRD	
P18	VENTILATION CONTROL PANEL, "VCP"	EXHAUST FAN, "EF"	3/4"	(2) – #12, (1) – #12 GRD	
P19	LIGHTING PANEL, "L"	OUTDOOR HEAT PUMP UNIT	3/4"	(2) – #12, (1) – #12 GRD	
P20	OUTDOOR HEAT PUMP UNIT	INDOOR HEAT PUMP UNIT	3/4"	(3) – #12, (1) – #12 GRD	

CONTROL CONDUIT AND CONDUCTOR SCHEDULE

CIRCUIT	SOURCE	DESTINATION	TRADE SIZE	(QUANTITY) CONDUCTORS	NOTES
C1	EXISTING/RELOCATED TELEMETRY PANEL, "RTU"	PUMP HOUSE INTRUSION SWITCH	3/4"	(2) – #14, (1) – #14 GRD	
C2	EXISTING/RELOCATED TELEMETRY PANEL, "RTU"	PUMP HATCH 1 INTRUSION SWITCH	3/4"	(2) – #14, (1) – #14 GRD	
C3	EXISTING/RELOCATED TELEMETRY PANEL, "RTU"	PUMP HATCH 2 INTRUSION SWITCH	3/4"	(2) – #14, (1) – #14 GRD	
C4	EXISTING/RELOCATED TELEMETRY PANEL, "RTU"	PUMP HOUSE SMOKE DETECTOR	3/4"	(4) – #14, (1) – #14 GRD	
C5	EXISTING/RELOCATED TELEMETRY PANEL, "RTU"	PUMP HOUSE OPERATOR IN TROUBLE PUSHBUTTON	3/4"	(2) – #14, (1) – #14 GRD	
C6	EXISTING/RELOCATED TELEMETRY PANEL, "RTU"	PUMP HOUSE FLOOD SWITCH	3/4"	(2) – #14, (1) – #14 GRD	
C7	EXISTING/RELOCATED TELEMETRY PANEL, "RTU"	PUMP 1 CHECK VALVE LIMIT SWITCH	3/4"	(2) – #14, (1) – #14 GRD	
C8	EXISTING/RELOCATED TELEMETRY PANEL, "RTU"	PUMP 2 CHECK VALVE LIMIT SWITCH	3/4"	(2) – #14, (1) – #14 GRD	
C9	EXISTING/RELOCATED TELEMETRY PANEL, "RTU"	EXISTING/RELOCATED AUTOMATIC TRANSFER SWITCH, "ATS"	3/4"	(12) – #14, (1) – #14 GRD	
C10	EXISTING/RELOCATED AUTOMATIC TRANSFER SWITCH, "ATS"	HANDHOLE	3/4"	(3) – #14, (1) – #14 GRD	
C11	PUMP HOUSE	HANDHOLE	2"	(1) – NYLON PULL CORD	SPARE CONDUIT FOR FUTURE USE
C12	PUMP 1 VARIABLE FREQUENCY DRIVE ENCLOSURE, "VFD–1"	PUMP 1 PRESSURE SWITCH	3/4"	(2) – #14, (1) – #14 GRD	
C13	PUMP 2 VARIABLE FREQUENCY DRIVE ENCLOSURE, "VFD–2"	PUMP 2 PRESSURE SWITCH	3/4"	(2) – #14, (1) – #14 GRD	
C14	VAULT INSTRUMENTATION AND CONTROL JUNCTION BOX	VAULT INTRUSION SWITCH	3/4"	(2) – #14, (1) – #14 GRD	
C15	VAULT INSTRUMENTATION AND CONTROL JUNCTION BOX	VAULT FLOOD SWITCH	3/4"	(2) – #14, (1) – #14 GRD	
C16	VAULT INSTRUMENTATION AND CONTROL JUNCTION BOX	SURGE ANTICIPATOR/PRESSURE RELIEF VALVE LIMIT SWITCH	3/4"	(2) – #14, (1) – #14 GRD	
C17	EXISTING/RELOCATED TELEMETRY PANEL, "RTU"	VAULT CONTROL JUNCTION BOX	1"	(6) – #14, (1) – #14 GRD	
C18	EXISTING/RELOCATED TELEMETRY PANEL, "RTU"	CLEARWELL FLOAT SWITCH	3/4"	(2) – #14, (1) – #14 GRD	
C19	COOLING THERMOSTAT	VENTILATION CONTROL PANEL, "VCP"	3/4"	(4) – #14, (1) – #14 GRD	
C20	EXISTING TREATMENT TELEMETRY PANEL, "RTU–T"	CAUSTIC SODA BULK TANK 1 OVERFLOW SWITCH	3/4"	(2) – #14, (1) – #14 GRD	
C21	EXISTING TREATMENT TELEMETRY PANEL, "RTU–T"	CAUSTIC SODA BULK TANK 2 OVERFLOW SWITCH	3/4"	(2) – #14, (1) – #14 GRD	

INSTRUMENTATION CONDUIT AND CONDUCTOR SCHEDULE

CIRCUIT	SOURCE	DESTINATION	TRADE SIZE	(QUANTITY) CONDUCTORS	NOTES
J1	EXISTING/RELOCATED FIBER PATCH PANEL	HANDHOLE	2"	(1) FIBER OPTIC CABLE	
J2	EXISTING/RELOCATED TELEMETRY PANEL, "RTU"	FLOW METER	1 1/2"	(1) 2–CONDUCTOR SHIELDED CABLE, (4) – #14, (1) – #14 GRD	
J3	EXISTING/RELOCATED TELEMETRY PANEL, "RTU"	OVERFLOW METERING MANHOLE RADAR LEVEL TRANSMITTER	1"	MANUFACTURER'S CABLE	
J4	EXISTING/RELOCATED TELEMETRY PANEL, "RTU"	SECURITY CAMERA POLE	1"	(1) – NYLON PULL CORD	SPARE CONDUIT FOR FUTURE USE
J5	EXISTING/RELOCATED TELEMETRY PANEL, "RTU"	PRESSURE TRANSMITTER	3/4"	(1) 2–CONDUCTOR SHIELDED CABLE	
J6	EXISTING/RELOCATED TELEMETRY PANEL, "RTU"	CLEARWELL RADAR LEVEL TRANSMITTER	3/4"	MANUFACTURER'S CABLE	
J7	EXISTING/RELOCATED TELEMETRY PANEL, "RTU"	PUMP 1 VARIABLE FREQUENCY DRIVE ENCLOSURE, "VFD–1"	3/4"	(1) CAT 5E ETHERNET CABLE	
J8	EXISTING/RELOCATED TELEMETRY PANEL, "RTU"	PUMP 2 VARIABLE FREQUENCY DRIVE ENCLOSURE, "VFD–2"	3/4"	(1) CAT 5E ETHERNET CABLE	
J9	PUMP 1 VARIABLE FREQUENCY DRIVE ENCLOSURE, "VFD–1"	EXISTING/RELOCATED PUMP 1	3/4"	(1) 2–CONDUCTOR SHIELDED CABLE	MOTOR THERMISTOR WIRING
J10	PUMP 2 VARIABLE FREQUENCY DRIVE ENCLOSURE, "VFD–1"	PUMP 2	3/4"	(1) 2–CONDUCTOR SHIELDED CABLE	MOTOR THERMISTOR WIRING
J11	EXISTING TREATMENT TELEMETRY PANEL, "RTU–T"	CAUSTIC SODA FILL STATION HIGH LEVEL ALARM PANEL	1 1/2"	(4) 2–CONDUCTOR SHIELDED CABLE, (10) – #14, (1) – #14 GRD	
J12	EXISTING TREATMENT TELEMETRY PANEL, "RTU–T"	CAUSTIC SODA BULK TANK 1 ULTRASONIC LEVEL TRANSMITTER	3/4"	(1) 2–CONDUCTOR SHIELDED CABLE	
J13	EXISTING TREATMENT TELEMETRY PANEL, "RTU–T"	CAUSTIC SODA BULK TANK 2 ULTRASONIC LEVEL TRANSMITTER	3/4"	(1) 2–CONDUCTOR SHIELDED CABLE	

LIGHTING FIXTURE SCHEDULE

TYPE	DESCRIPTION	MANUFACTURER NAME	MANUFACTURER CATALOG NO.	LAMP QTY. *	LAMP CATALOG NO.	REMARKS
A1	LED LIGHT FIXTURE, 120 VAC, 4'–4" LONG, 45 WATT, 5000K COLOR TEMPERATURE, 60,000 HOUR LED, HIGH EFFICIENCY DRIVER, HIGH–IMPACT ACRYLIC LENS, MOLDED FIBERGLASS HOUSING, CEILING MOUNTED, U.L. LISTED FOR WET LOCATIONS.	LITHONIA	FEM L48 6000LM IMAFL 50K	1	INTEGRATED LED	
A2	LED OUTDOOR AREA LIGHT – (1)–27W 10C LED. 700mA, 5000K COLOR TEMPERATURE, 120VAC, MOUNT BOTTOM OF FIXTURE 1'–0" ABOVE DOOR, U.L. LISTED FOR WET LOCATIONS.	LITHONIA	DSXW1 LED 10C 700 50K T3M 120 DDBXD	1	INTEGRATED LED	
A3	DUAL HEAD EMERGENCY LIGHT – (2)–1.8W LED LAMPS, DUAL–VOLTAGE INPUT 120VAC/277VAC, 3 3/4" H, 14 5/8" W, THERMOPLASTIC HOUSING, INTEGRATED RECHARGEABLE BATTERY, MOUNT BOTTOM OF FIXTURE 1'–0" ABOVE DOOR, U.L. LISTED FOR DAMP LOCATIONS.	LITHONIA	EU2 LED M12	2	1.5 WATT DC	

★ NUMBER OF LAMPS PER FIXTURE

PANEL SCHEDULE L

NO. L — LOCATION: ELECTRICAL ROOM — SERVING: ELECTRICAL ROOM LOADS

208/120 VOLTS 3ϕ 4 WIRE — 60 AMP MAIN CIRCUIT BREAKER

CIRCUIT DESCRIPTION	KVA	AMP			AMP	KVA	CIRCUIT DESCRIPTION
EXISTING/RELOCATED TELEMETRY PANEL, "RTU"	0.50	20	1	2	20	0.15	BUILDING EXTERIOR LIGHTS
BUILDING LIGHTS	0.68	20	3	4	20	0.53	VENTILATION CONTROL PANEL, "VCP"
BUILDING RECEPTACLES 1	0.72	20	5	6	20	0.72	BUILDING RECEPTACLES 2
EXTERIOR RECEPTACLES	0.72	20	7	8	30	3.74	HEAT PUMP
SPARE	–	20	9	10	2P	–	
SPARE	–	20	11	12	20	–	SPARE
SPARE	–	20	13	14	20	–	SPARE
SPARE	–	20	15	16	20	–	SPARE
SPARE	–	20	17	18	20	–	SPARE
SPARE	–	20	19	20	20	–	SPARE
SPACE	–	–	21	22	–	–	SPACE
SPACE	–	–	23	24	–	–	SPACE
SPACE	–	–	25	26	–	–	SPACE
SPACE	–	–	27	28	–	–	SPACE
SPACE	–	–	29	30	–	–	SPACE

CONNECTION LOAD: 7.77 KVA 21.57 AMPS

DEMAND: LIGHTING & RECEPTACLE LOAD

DEMAND LOAD: 7.77 KVA 21.57 AMPS

ELECTRICAL EQUIPMENT AND INSTRUMENTATION SCHEDULE

ITEM	DESCRIPTION	MANUFACTURER	MODEL NO.
A	MAIN DISTRIBUTION PANEL, "MDP" – 480/277 VOLT, 3ϕ, 4W, PANELBOARD. NEMA TYPE 12 ENCLOSURE. CIRCUIT BREAKERS AS SHOWN ON ONE–LINE DIAGRAM. COPPER BUSSING.	SIEMENS	TYPE P2 OR EQUAL
B	LIGHTING TRANSFORMER – DRY TYPE, 480–208/120V, 3ϕ, WITH COPPER WINDINGS, VENTILATED, WALL MOUNTED, NEMA 3R ENCLOSURE. UL LISTED.	SIEMENS	3F3Y015CD16 OR EQUAL
C	LIGHTING PANEL – 208/120V, 3ϕ, 4W. NEMA 12 ENCLOSURE. CIRCUIT BREAKERS AS SHOWN ON PANEL SCHEDULE. COPPER BUSSING.	SIEMENS	TYPE P1 OR EQUAL
D	SMOKE DETECTOR – PHOTOELECTRIC, 24 VDC POWERED WITH LOCAL AND AUDIBLE ALARM SIGNAL AND CONTACTS FOR REMOTE ANNUNCIATION THROUGH FOUR WIRE CONNECTION TO RTU.	SYSTEMS SENSOR	4WTAR–B OR EQUAL
E	INTRUSION ALARM SWITCH – CONTRACTOR SHALL SELECT ACTUATOR LEVER ARM BEST SUITED FOR MOUNTING CONFIGURATION	SQUARE D	HEAVY DUTY TYPE C, CLASS 9007 OR EQUAL
F	FLOOD SWITCH – N.O. REED TYPE FLOAT SWITCH, 20 VA. SEE DWG NO. E13 FOR DETAILS.	OMEGA	LVN–20 OR EQUAL
G	PRESSURE SWITCH	SEE SPECIFICATIONS	SEE SPECIFICATIONS
H	PRESSURE TRANSMITTER	SEE SPECIFICATIONS	SEE SPECIFICATIONS
I	VALVE LIMIT SWITCH	SEE SPECIFICATIONS	SEE SPECIFICATIONS
J	WALL MOUNTED COOLING THERMOSTAT – SNAP ACTION, SPDT LINE VOLTAGE AIR SWITCH CONTROLLER. RANGE: –30° – 100°F, SET AT 75°F. MOUNT 4 FEET ABOVE FINISHED FLOOR.	HONEYWELL	T775A2009/U OR EQUAL
K	INTRUSION ALARM SWITCH – CONTRACTOR SHALL SELECT ACTUATOR LEVER ARM BEST SUITED FOR MOUNTING CONFIGURATION. SWITCH SHALL BE A WATERTIGHT SEALED SWITCH.	ALLEN–BRADLEY	WATERTIGHT 802X SERIES
L	RADAR LEVEL TRANSMITTER	SEE SPECIFICATIONS	SEE SPECIFICATIONS
M	OPERATOR IN TROUBLE PUSHBUTTON	SEE SPECIFICATIONS	SEE SPECIFICATIONS
N	FLOAT SWITCH	SEE SPECIFICATIONS	SEE SPECIFICATIONS
O	ULTRASONIC LEVEL TRANSMITTER	SEE SPECIFICATIONS	SEE SPECIFICATIONS
P	ANTENNA	SEE SPECIFICATIONS	SEE SPECIFICATIONS

RH2

GODFREY G. DILLARD — STATE OF WASHINGTON — 31196 — REGISTERED PROFESSIONAL ENGINEER

SIGNED: 12/8/2023

CHRISTOPHER MICHAEL FISCHER — STATE OF WASHINGTON — 45317 — REGISTERED PROFESSIONAL ENGINEER

SIGNED: 12/8/2023

CITY OF BONNEY LAKE
GRAINGER SPRINGS
PUMP HOUSE REPLACEMENT

BONNEY Lake

ELECTRICAL SCHEDULES

JOB NO: 214231
CLIENT: BON
FILENAME: GRS-D-E09.DWG
SAVE DATE: Oct 17, 2023
PLOT DATE: Dec 11, 2023
ENGINEER: KES
REVIEWED: CMR

REVISIONS

NO.	DATE	DESCRIPTION	BY	REVIEW

SCALE: SHOWN
0" 1" 2"
DRAWING IS FULL SCALE WHEN BAR MEASURES 2"

DWG NO.: E15
SHEET NO.: 43 / 50

INSTALL PROPOSED SMOKE DETECTOR ALARM RESET PUSHBUTTON

EXISTING GRAINGER SPRINGS PUMP HOUSE TELEMETRY PANEL, "RTU" EXTERIOR

NO SCALE

EXISTING ETHERNET SWITCH TO BE REPLACED WITH PROPOSED ETHERNET SWITCH. EXISTING SWITCH TO BE RETURNED TO OWNER.

INSTALL PROPOSED TERMINAL BLOCKS AND FUSES IN EXISTING PANEL.

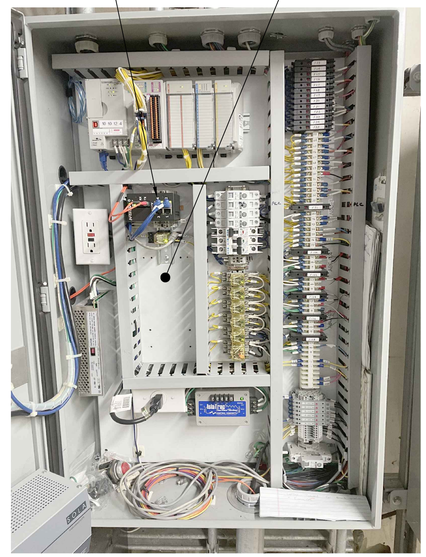

EXISTING GRAINGER SPRINGS PUMP HOUSE TELEMETRY PANEL, "RTU" INTERIOR

NO SCALE

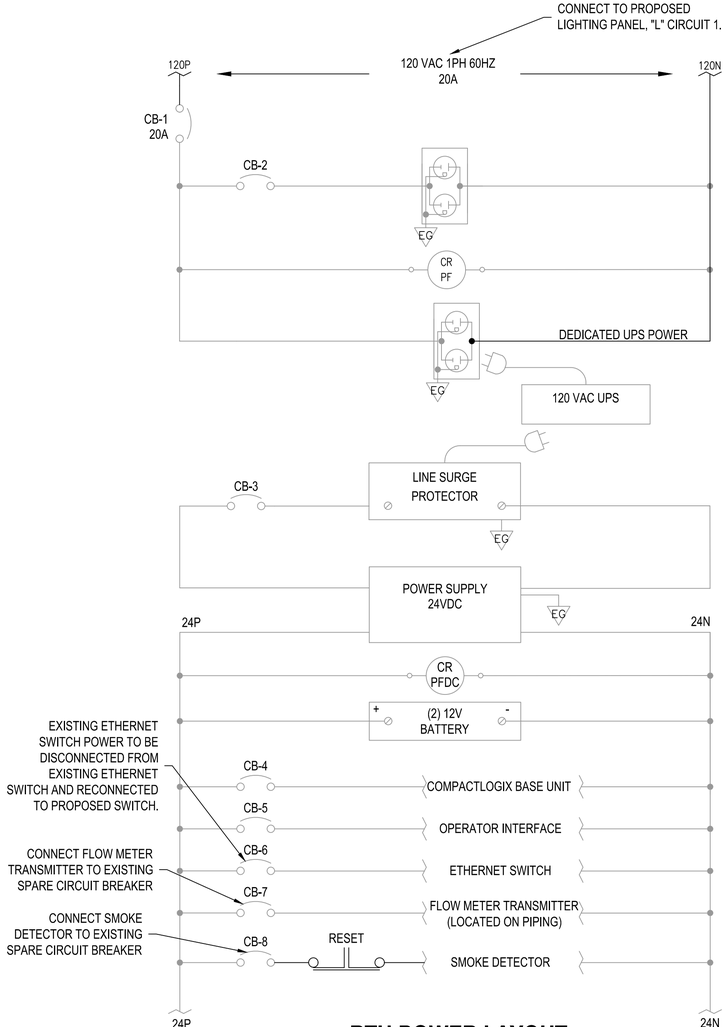

RTU POWER LAYOUT

NOT TO SCALE

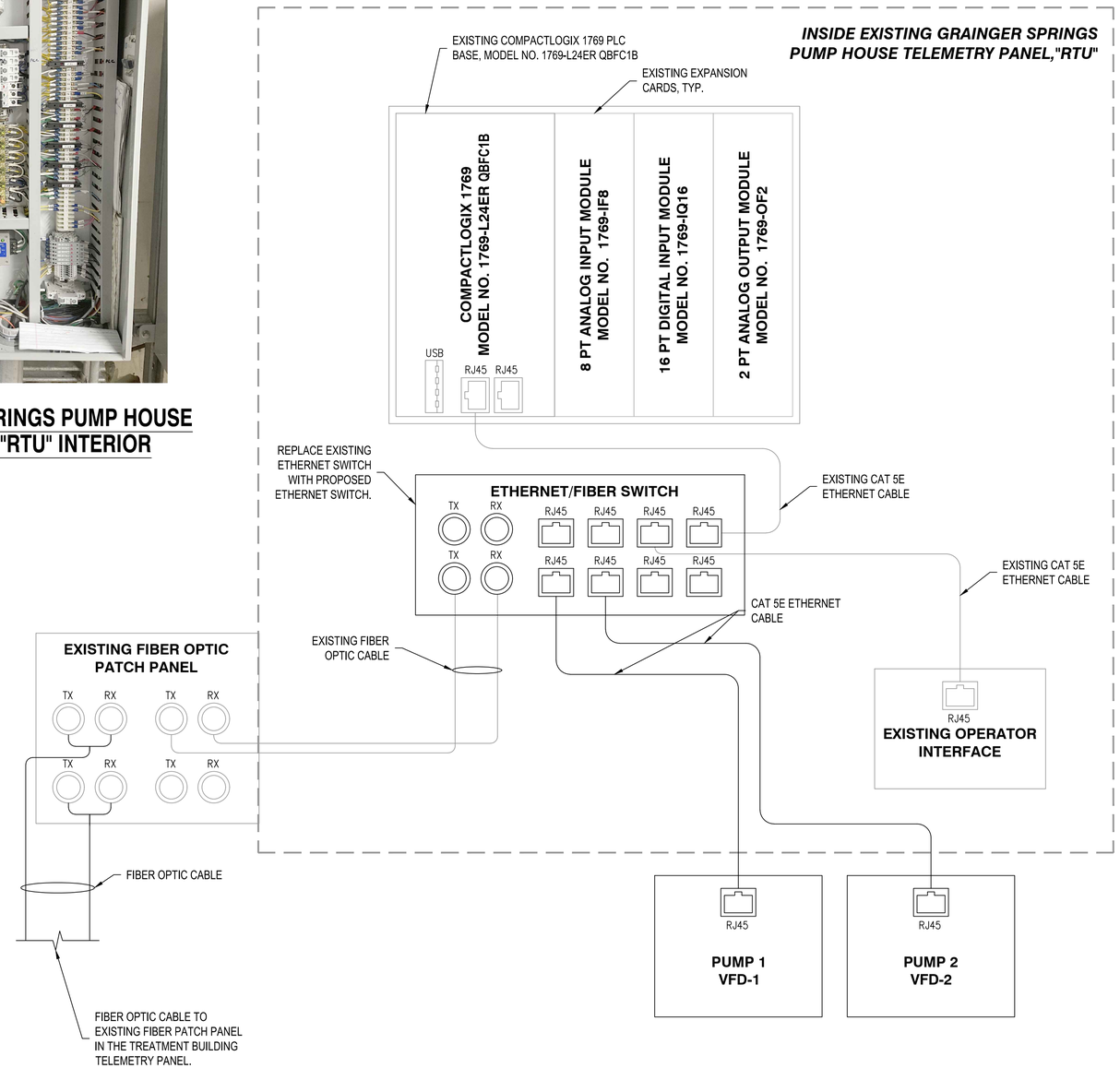

COMMUNICATIONS LAYOUT

NOT TO SCALE

RH2

GODFREY G. DILLARD
STATE OF WASHINGTON
31196
REGISTERED PROFESSIONAL ENGINEER
SIGNED: 12/8/2023

CHRISTOPHER MICHAEL KNEERS
STATE OF WASHINGTON
45317
REGISTERED PROFESSIONAL ENGINEER
SIGNED: 12/8/2023

CITY OF BONNEY LAKE
GRAINGER SPRINGS
PUMP HOUSE REPLACEMENT

BONNEY Lake

RTU - POWER AND COMMUNICATIONS DIAGRAM MODIFICATIONS

JOB NO.: 21-0231
CLIENT: BON
FILENAME: GRS-D-E16.DWG
SAVE DATE: Oct 17, 2023
PLOT DATE: Dec 11, 2023
ENGINEER: KES
REVIEWED: CMR

REVISIONS

NO.	DATE	DESCRIPTION	BY	REVIEW

SCALE: SHOWN
0" 1" 2"
DRAWING IS FULL SCALE WHEN BAR MEASURES 2"

DWG NO.: E16
SHEET NO.: 44 / 50

ELECTRICAL NOTES	
1	1. EXISTING CONNECTION TO BE DISCONNECTED AND REPLACED WITH PROPOSED CONNECTION.
2	2. DISCONNECT EXISTING CONNECTION AND MAKE SPARE.
E	3. EXISTING EQUIPMENT OR CONNECTION.
P	4. PROPOSED EQUIPMENT OR CONNECTION.

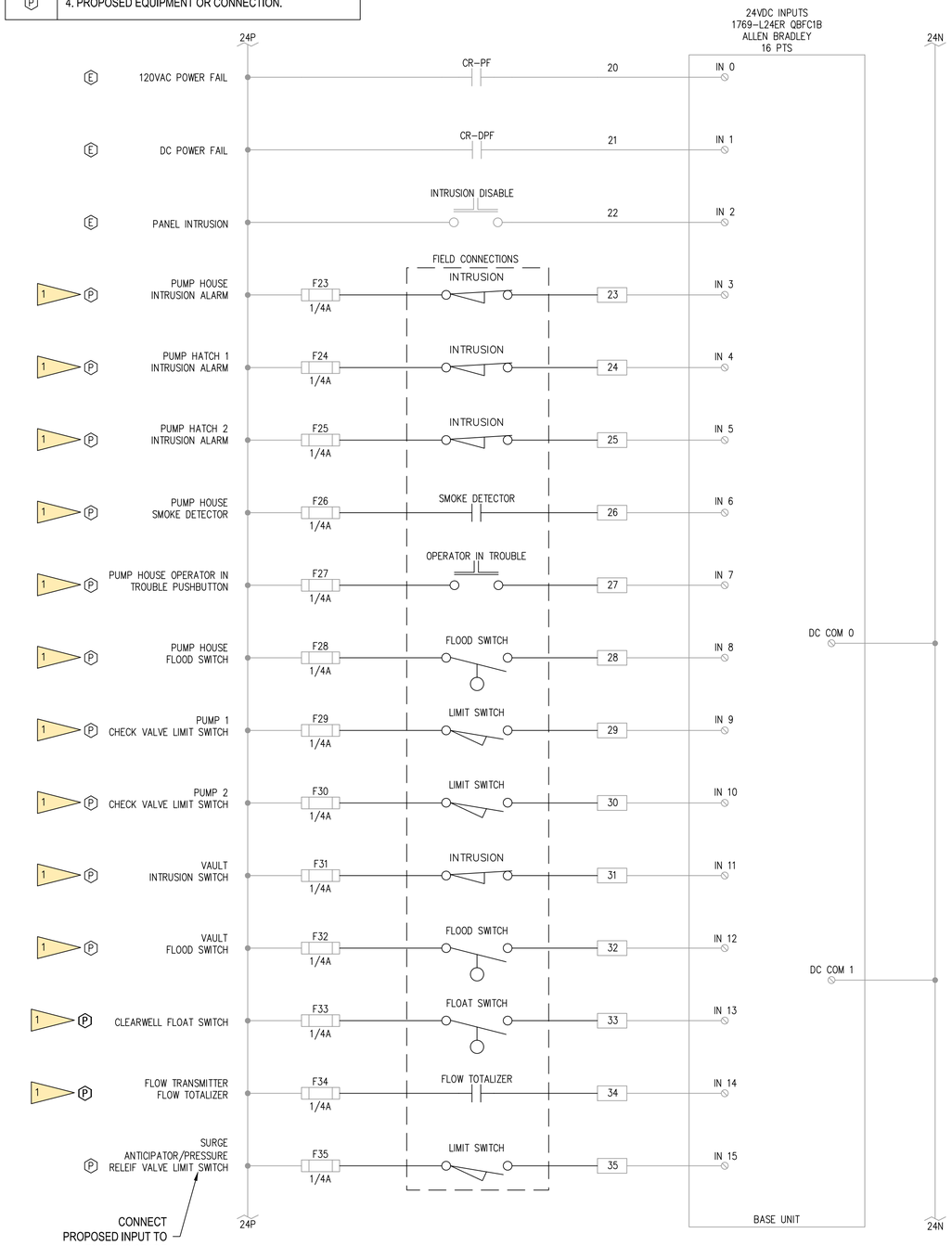

DIGITAL INPUTS, EXISTING BASE UNIT

NOT TO SCALE

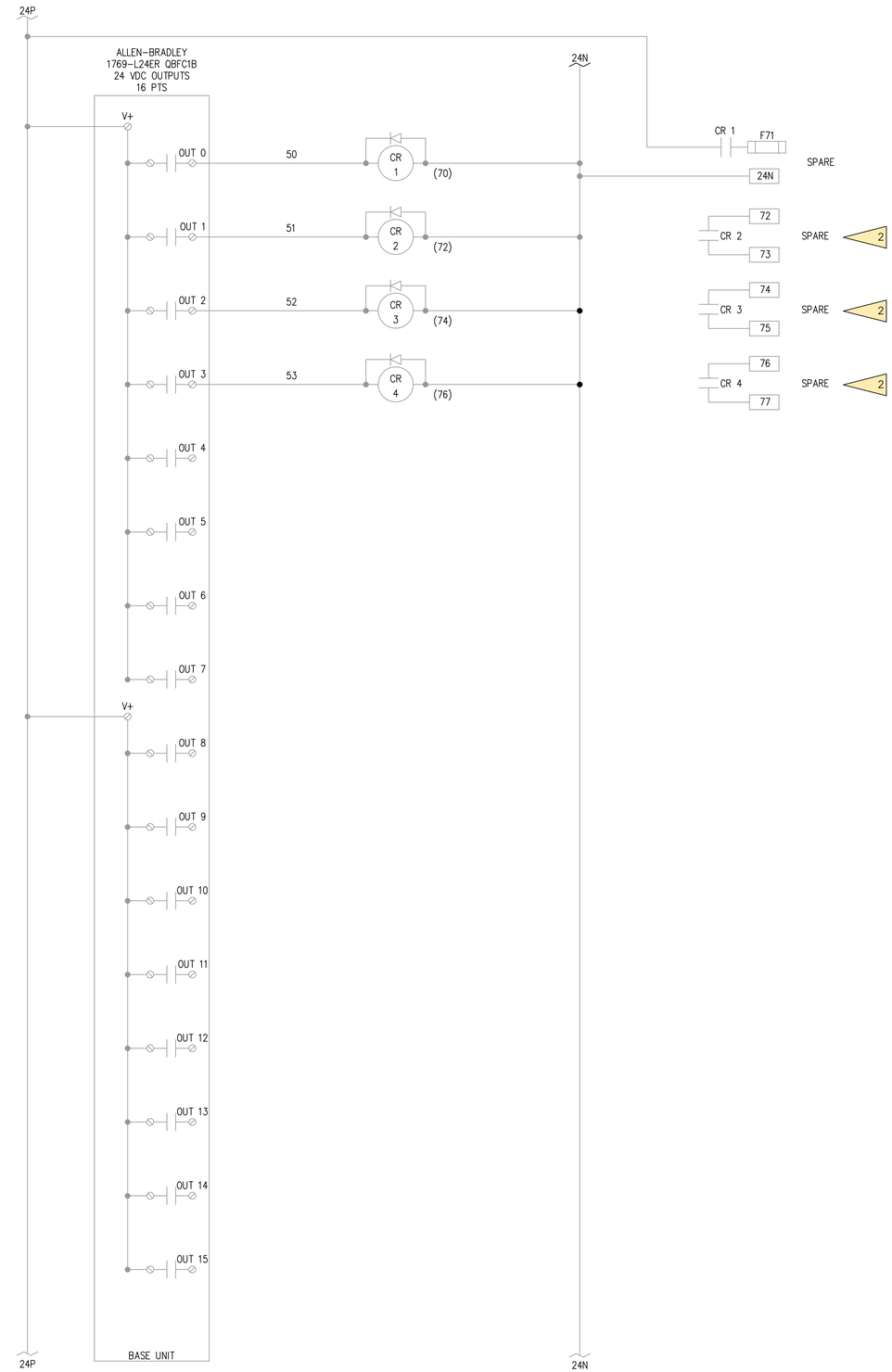

DIGITAL OUTPUTS, EXISTING BASE UNIT

NOT TO SCALE

RH2

GODFREY G. DILLARD — STATE OF WASHINGTON — 31196 — REGISTERED PROFESSIONAL ENGINEER

SIGNED: 12/8/2023

CHRISTOPHER MICHAEL FLEMING — STATE OF WASHINGTON — 45317 — REGISTERED PROFESSIONAL ENGINEER

SIGNED: 12/8/2023

CITY OF BONNEY LAKE
GRAINGER SPRINGS
PUMP HOUSE REPLACEMENT

BONNEY Lake

RTU - PLC INPUT AND OUTPUT WIRING 1

ENGINEER: KES
REVIEWED: CMR
SAVE DATE: Oct 17, 2023
PLOT DATE: Dec 11, 2023
CLIENT: BON
FILENAME: GRS-D-E11.DWG
JOB NO: 21-0291

REVISIONS

NO.	DATE	DESCRIPTION	BY	REVIEW

SCALE: SHOWN

0" 1" 2"

DRAWING IS FULL SCALE WHEN BAR MEASURES 2"

DWG NO.: E17

SHEET NO.: 45 / 50

ELECTRICAL NOTES

1. EXISTING CONNECTION TO BE DISCONNECTED AND REPLACED WITH PROPOSED CONNECTION.
2. DISCONNECT EXISTING CONNECTION AND MAKE SPARE.
3. RECONNECT EXISTING INPUT.
4. EXISTING EQUIPMENT OR CONNECTION.
5. PROPOSED EQUIPMENT OR CONNECTION.

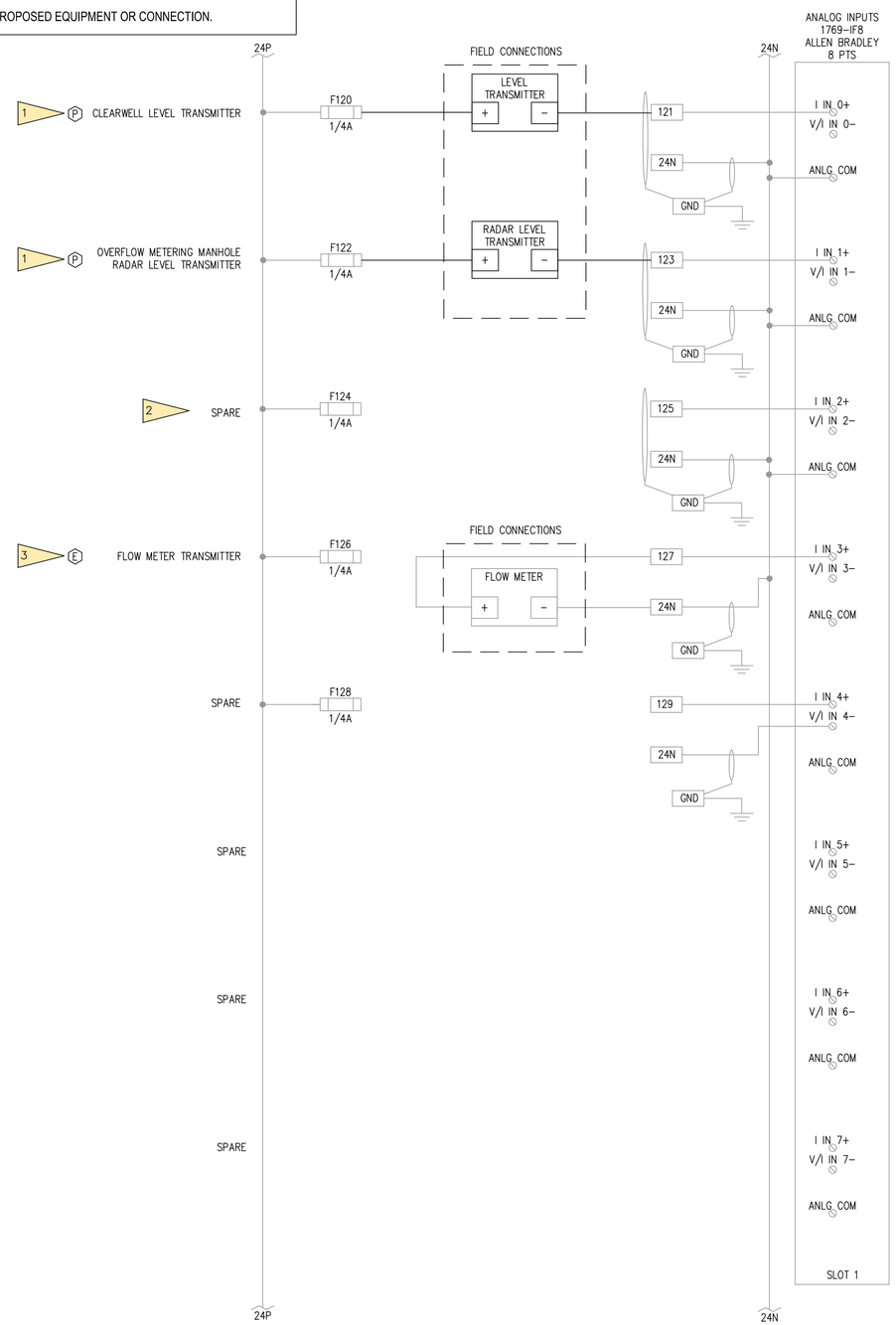

ANALOG INPUTS, SLOT 1

NOT TO SCALE

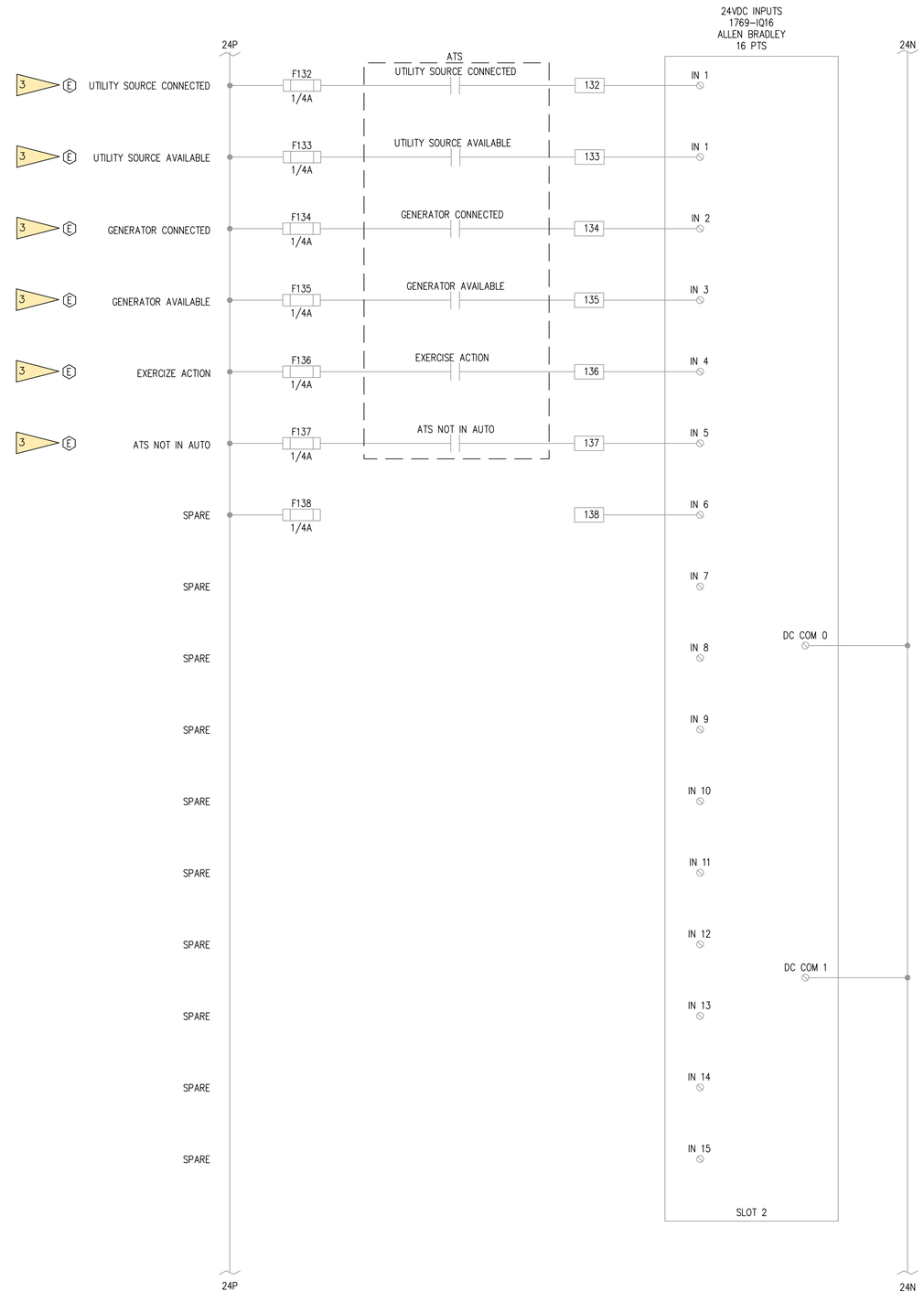

DIGITAL INPUTS, SLOT 2

NOT TO SCALE

RH2

GODFREY G. DILLARD
STATE OF WASHINGTON
31196
REGISTERED PROFESSIONAL ENGINEER

SIGNED: 12/8/2023

CHRISTOPHER MICHAEL ROBERTS
STATE OF WASHINGTON
45317
REGISTERED PROFESSIONAL ENGINEER

SIGNED: 12/8/2023

CITY OF BONNEY LAKE
GRAINGER SPRINGS
PUMP HOUSE REPLACEMENT

BONNEY LAKE

RTU - PLC INPUT AND OUTPUT WIRING 2

ENGINEER: KES
REVIEWED: CMR
SAVE DATE: Oct 17, 2023
PLOT DATE: Dec 11, 2023
CLIENT: BON
FILENAME: GRS-D-E11.DWG
JOB NO.: 21-0291

REVISIONS

NO.	DATE	DESCRIPTION	BY	REVIEW

SCALE: SHOWN

0" 1" 2"

DRAWING IS FULL SCALE WHEN BAR MEASURES 2"

DWG NO.: E18

SHEET NO.: 46 / 50

ELECTRICAL NOTES	
1	1. DISCONNECT EXISTING CONNECTION AND MAKE SPARE.

ANALOG OUTPUTS, SLOT 3

NOT TO SCALE

RH2

GODFREY G. DILLARD
STATE OF WASHINGTON
31196
REGISTERED PROFESSIONAL ENGINEER

SIGNED: 12/8/2023

CHRISTOPHER MICHAEL ROGERS
STATE OF WASHINGTON
45317
REGISTERED PROFESSIONAL ENGINEER

SIGNED: 12/8/2023

CITY OF BONNEY LAKE
GRAINGER SPRINGS
PUMP HOUSE REPLACEMENT

RTU - PLC INPUT AND OUTPUT WIRING 3

ENGINEER: KES
REVIEWED: CMR
SAVE DATE: Oct 17, 2023
PLOT DATE: Dec 11, 2023
CLIENT: BON
FILENAME: GRS-D-E11.DWG
JOB NO.: 21-0291

REVISIONS

NO.	DATE	DESCRIPTION	BY	REVIEW

SCALE: SHOWN

0" 1" 2"

DRAWING IS FULL SCALE WHEN BAR MEASURES 2"

DWG NO.: E19

SHEET NO.: 47 / 50

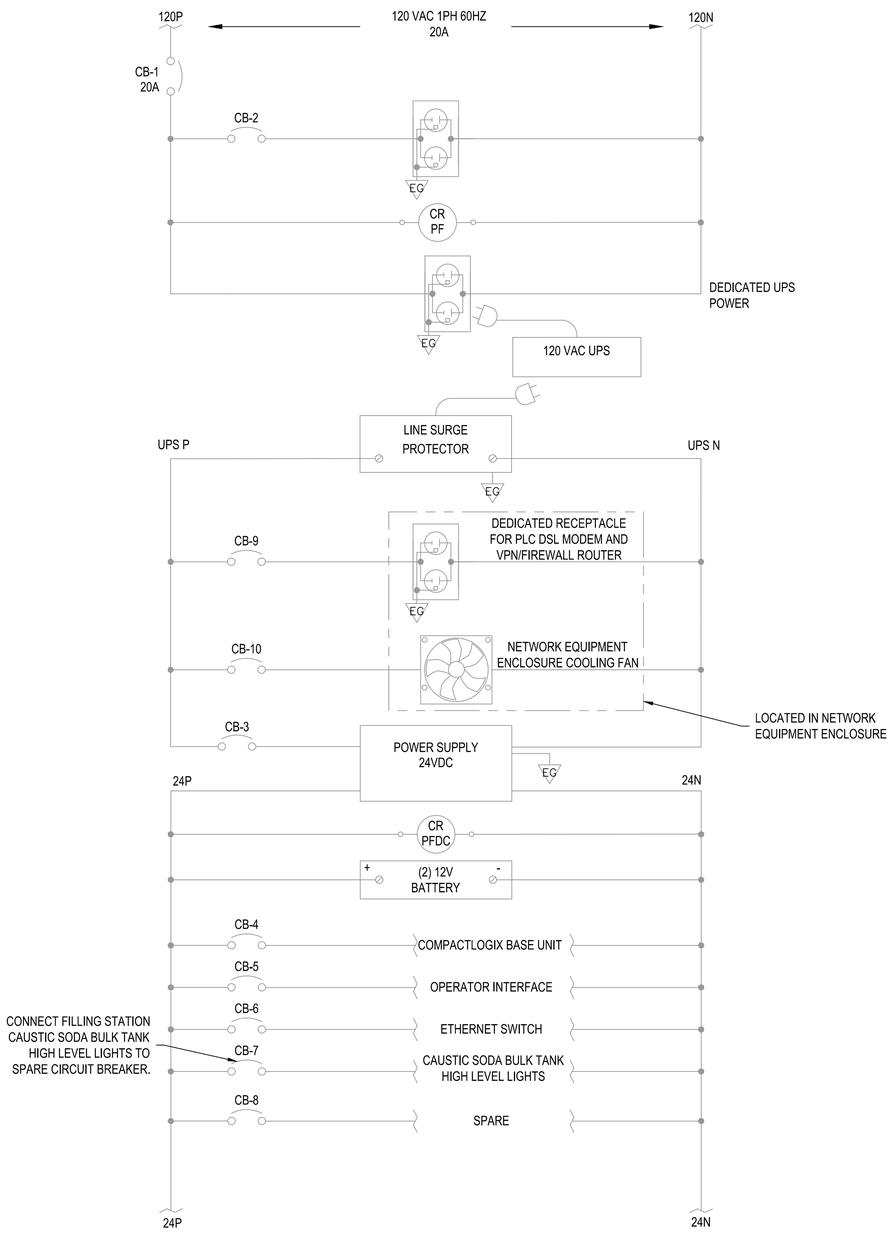

TREATMENT PLANT RTU POWER LAYOUT

NOT TO SCALE

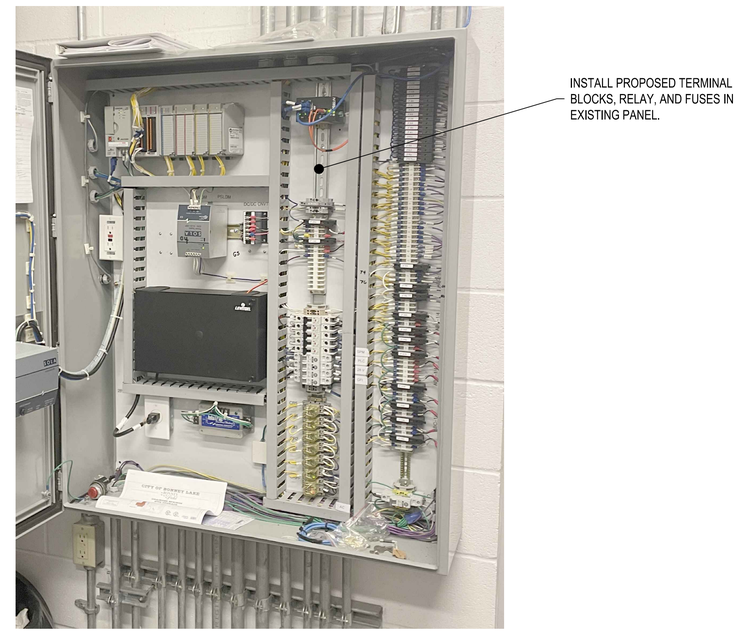

EXISTING GRAINGER SPRINGS PUMP HOUSE TELEMETRY PANEL, "RTU" INTERIOR

NO SCALE

RH2

GODFREY G. DILLARD
STATE OF WASHINGTON
31196
REGISTERED PROFESSIONAL ENGINEER

SIGNED: 12/8/2023

CHRISTOPHER MICHAEL FERGUSON
STATE OF WASHINGTON
45317
REGISTERED PROFESSIONAL ENGINEER

SIGNED: 12/8/2023

CITY OF BONNEY LAKE
GRAINGER SPRINGS
PUMP HOUSE REPLACEMENT

BONNEY Lake

TREATMENT PLANT RTU - POWER
DIAGRAM MODIFICATIONS (BID ADD)

ENGINEER: MES | SAVE DATE: Oct 17, 2023 | CLIENT: BON | JOB NO.: 21-0231
REVIEWED: CMR | PLOT DATE: Dec 11, 2023 | FILENAME: GRS-D-E11.DWG

REVISIONS

NO.	DATE	DESCRIPTION	BY	REVIEW

SCALE: SHOWN

0" 1" 2"

DRAWING IS FULL SCALE WHEN BAR MEASURES 2"

DWG NO.: E20

SHEET NO.: 48 / 50

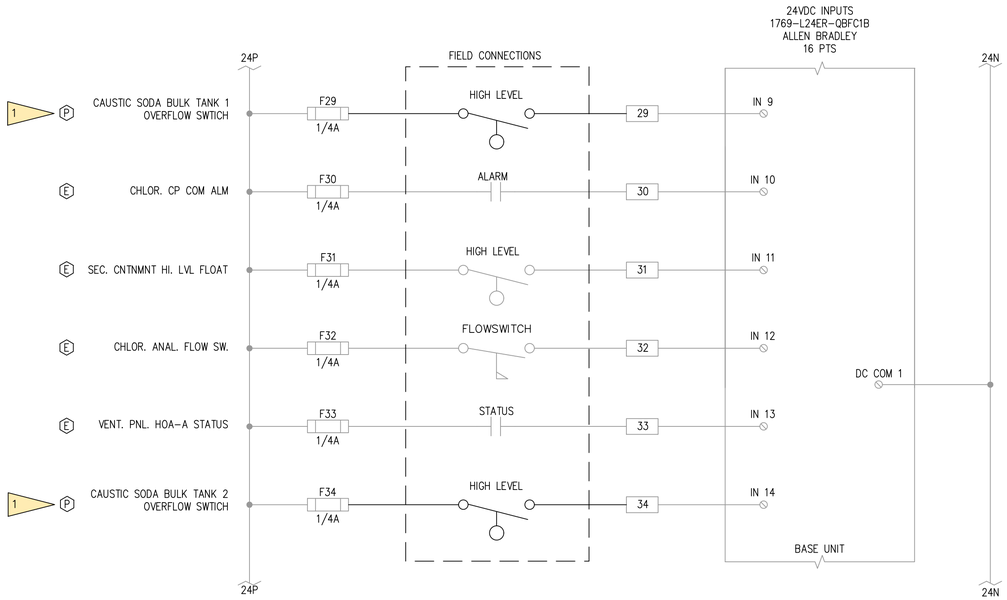

TREATMENT PLANT DIGITAL INPUTS, EXISTING BASE UNIT

NOT TO SCALE

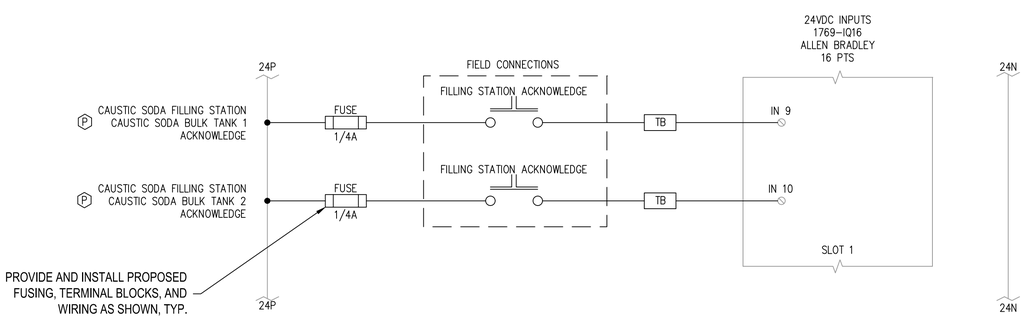

TREATMENT PLANT DIGITAL INPUTS, EXISTING SLOT 1

NOT TO SCALE

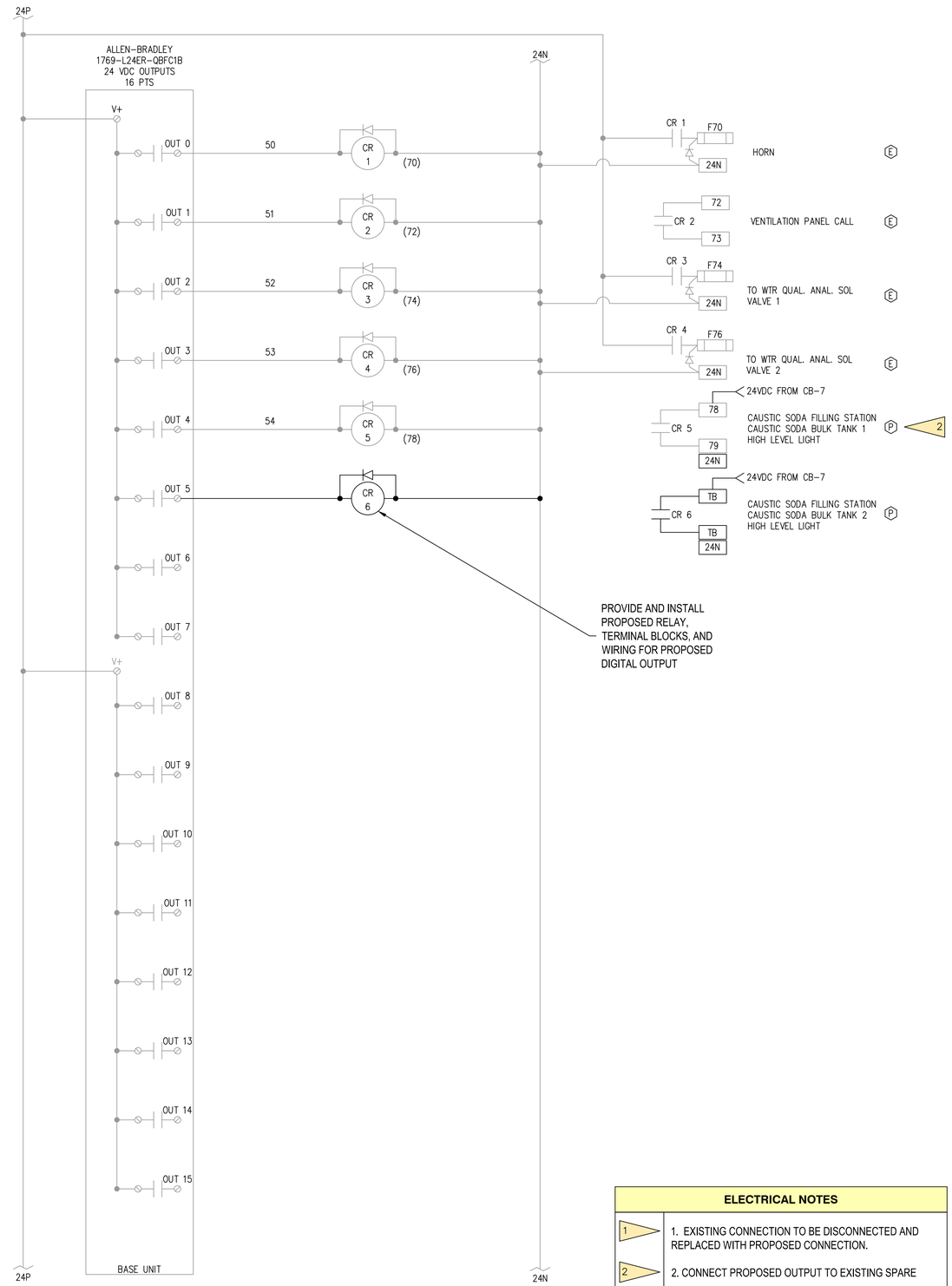

DIGITAL OUTPUTS, EXISTING BASE UNIT

NOT TO SCALE

ELECTRICAL NOTES	
1	1. EXISTING CONNECTION TO BE DISCONNECTED AND REPLACED WITH PROPOSED CONNECTION.
2	2. CONNECT PROPOSED OUTPUT TO EXISTING SPARE
E	3. EXISTING EQUIPMENT OR CONNECTION.
P	4. PROPOSED EQUIPMENT OR CONNECTION.

RH2

GODFREY G. DILLARD, STATE OF WASHINGTON, 31196, REGISTERED PROFESSIONAL ENGINEER

SIGNED: 12/8/2023

CHRISTOPHER MICHAEL KEGERIS, STATE OF WASHINGTON, 45317, REGISTERED PROFESSIONAL ENGINEER

SIGNED: 12/8/2023

CITY OF BONNEY LAKE
GRAINGER SPRINGS
PUMP HOUSE REPLACEMENT

TREATMENT PLANT RTU - PLC INPUT AND OUTPUT WIRING 1 (BID ADD)

BONNEY LAKE

ENGINEER: KES
REVIEWED: CMR
SAVE DATE: Oct 17, 2023
PLOT DATE: Dec 11, 2023
CLIENT: BON
FILENAME: GRS-D-E11.DWG
JOB NO.: 21-0291

REVISIONS

NO.	DATE	DESCRIPTION	BY	REVIEW

SCALE: SHOWN

0" 1" 2"

DRAWING IS FULL SCALE WHEN BAR MEASURES 2"

DWG NO.: E21

SHEET NO.: 49 / 50

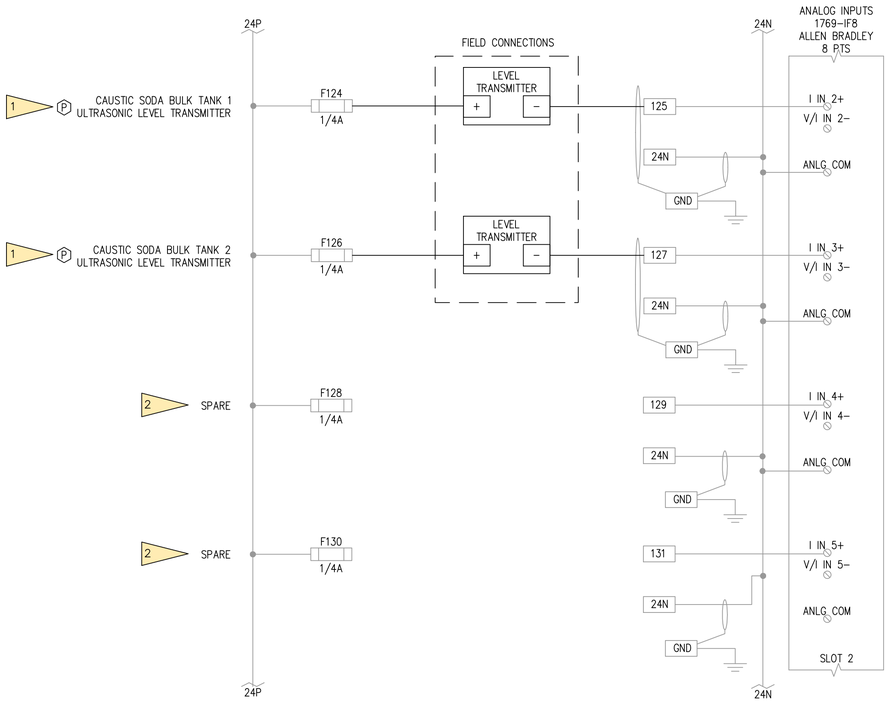

ANALOG INPUTS, EXISTING SLOT 2

NOT TO SCALE

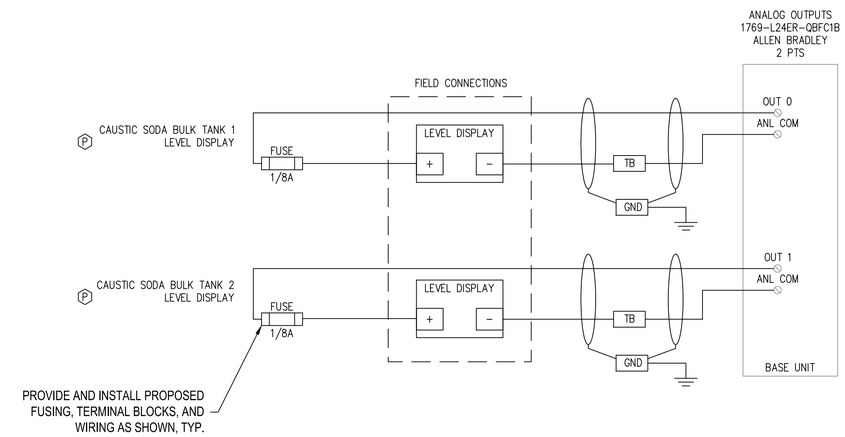

ANALOG OUTPUTS, EXISTING BASE UNIT

NOT TO SCALE

ELECTRICAL NOTES	
1	1. EXISTING CONNECTION TO BE DISCONNECTED AND REPLACED WITH PROPOSED CONNECTION.
2	2. DISCONNECT EXISTING CONNECTION AND MAKE SPARE.
E	3. EXISTING EQUIPMENT OR CONNECTION.
P	4. PROPOSED EQUIPMENT OR CONNECTION.

RH2

GODFREY G. DILLARD
STATE OF WASHINGTON
31196
REGISTERED PROFESSIONAL ENGINEER

SIGNED: 12/8/2023

CHRISTOPHER MICHAEL FLEGERS
STATE OF WASHINGTON
45317
REGISTERED PROFESSIONAL ENGINEER

SIGNED: 12/8/2023

CITY OF BONNEY LAKE
GRAINGER SPRINGS
PUMP HOUSE REPLACEMENT

TREATMENT PLANT RTU - PLC INPUT AND OUTPUT WIRING 2 (BID ADD)

BONNEY Lake

ENGINEER: KES
REVIEWED: CMR
SAVE DATE: Oct 17, 2023
PLOT DATE: Dec 11, 2023
CLIENT: BON
FILENAME: GRS-D-E11.DWG
JOB NO.: 21-0231

REVISIONS

NO.	DATE	DESCRIPTION	BY	REVIEW

SCALE: SHOWN

0" 1" 2"

DRAWING IS FULL SCALE WHEN BAR MEASURES 2"

DWG NO.: E22

SHEET NO.: 50 / 50